AUTHORIZATION TO DISCHARGE UNDER
THE NATIONAL POLLUTANT DISCHARGE ELIMINATION SYSTEM

In compliance with the provisions of the Federal Clean Water Act as amended, (33 U.S.C. §§1251 et seq.; the "CWA"), and the Massachusetts Clean Waters Act, as amended, (M.G.L. Chap. 21, §§26-53),

Sunoco Partners Marketing and Terminals L.P.

is authorized to discharge from a facility located at

Sunoco Logistics Terminal
467 Chelsea Street
East Boston, MA 02128

to receiving water named

Chelsea River (MA71-06)
Mystic River Watershed

in accordance with effluent limitations, monitoring requirements and other conditions set forth herein.

This permit shall become effective on the first day of the calendar month following 60 days after signature.
This permit expires at midnight, five years from the last day of the month preceding the effective date.

This permit supersedes the permit issued on August 25, 2006.

This permit consists of 26 pages in Part I including effluent limitations, monitoring requirements, 10 pages in Attachment A – Marine Acute Toxicity Test Procedure and Protocol (2012), and 25 pages in Part II, the Standard Conditions.

Signed this 24th day of September, 2014

/S/SIGNATURE ON FILE

Ken Moraff, Director
Office of Ecosystem Protection
Environmental Protection Agency
Region 1
Boston, MA

/S/SIGNATURE ON FILE

David Ferris, Director
Massachusetts Wastewater Management Program
Department of Environmental Protection
Commonwealth of Massachusetts
Boston, MA

PART I

A. EFFLUENT LIMITATIONS AND MONITORING REQUIREMENTS

1. During the period beginning on the effective date and lasting through the expiration date, the Permittee is authorized to discharge treated stormwater, hydrostatic test water, and treated groundwater from internal Outfall 002 from **Outfall Serial Number 001** to the Chelsea River. The discharge shall be limited and monitored by the Permittee as specified below:

Effluent Characteristic	**Discharge Limitation**		**Monitoring Requirements[1]**	
Parameter	**Average Monthly**	**Maximum Daily**	**Measurement Frequency[2]**	**Sample Type[3]**
FLOW RATE[4]	---	600 GPM	When Discharging	Estimate
TOTAL FLOW[5]	---	Report MGal/Mo	When Discharging	Meter
NUMBER OF EVENTS	---	Report #/Mo	When Discharging	Count
pH RANGE[6,7]	6.5 – 8.5 SU		Monthly	Grab
TOTAL SUSPENDED SOLIDS	30 mg/L	100 mg/L	Monthly	Grab
OIL AND GREASE	---	15 mg/L	Monthly	Grab
VOLATILE ORGANIC COMPOUNDS (VOCs)[8]				
Benzene	40 µg/L	Report µg/L	Monthly	Grab
POLYCYCLIC AROMATIC HYDROCARBONS (PAHs)[9]				
Benzo(a)pyrene	0.018 µg/L	Report µg/L	Monthly	Grab
Naphthalene[10]	---	10 µg/L	Monthly	Grab
LEAD[11]	---	Report µg/L	1/Year	Grab

OXYGENATES				
Methyl tert-butyl ether	---	Report µg/L	Quarterly	Grab
Ethanol[12]	---	Report mg/L	Quarterly	Grab
POLLUTANT SCAN, EFFLUENT[13]				
Benzene	---	Report µg/L	Quarterly	Grab
Ethylbenzene	---	Report µg/L	Quarterly	Grab
Toluene	---	Report µg/L	Quarterly	Grab
Total Xylenes	---	Report µg/L	Quarterly	Grab
Benzo(a)anthracene	---	Report µg/L	Quarterly	Grab
Benzo(a)pyrene	---	Report µg/L	Quarterly	Grab
Benzo(b)fluoranthene	---	Report µg/L	Quarterly	Grab
Benzo(k)fluoranthene	---	Report µg/L	Quarterly	Grab
Chrysene	---	Report µg/L	Quarterly	Grab
Dibenzo(a,h)anthracene	---	Report µg/L	Quarterly	Grab
Indeno(1,2,3-cd)pyrene	---	Report µg/L	Quarterly	Grab
Acenaphthene	---	Report µg/L	Quarterly	Grab
Acenaphthylene	---	Report µg/L	Quarterly	Grab
Anthracene	---	Report µg/L	Quarterly	Grab
Benzo(g,h,i)perylene	---	Report µg/L	Quarterly	Grab
Fluoranthene	---	Report µg/L	Quarterly	Grab

Fluorene	---	Report µg/L	Quarterly	Grab
Naphthalene[10]	---	Report µg/L	Quarterly	Grab
Phenanthrene	---	Report µg/L	Quarterly	Grab
Pyrene	---	Report µg/L	Quarterly	Grab
Chromium	---	Report µg/L	Quarterly	Grab
Iron	---	Report µg/L	Quarterly	Grab
Cyanide	---	Report µg/L	Quarterly	Grab
Phenol	---	Report µg/L	Quarterly	Grab
tert-butyl alcohol	---	Report µg/L	Quarterly	Grab
Ammonia	---	Report mg/L	Quarterly	Grab
Fecal coliform	---	Report cfu/100mL	Quarterly	Grab
POLLUTANT SCAN, RECEIVING WATER[14]				
Benzene	---	Report µg/L	Quarterly	Grab
Ethylbenzene	---	Report µg/L	Quarterly	Grab
Toluene	---	Report µg/L	Quarterly	Grab
Total Xylenes	---	Report µg/L	Quarterly	Grab
Benzo(a)anthracene	---	Report µg/L	Quarterly	Grab
Benzo(a)pyrene	---	Report µg/L	Quarterly	Grab
Benzo(b)fluoranthene	---	Report µg/L	Quarterly	Grab
Benzo(k)fluoranthene	---	Report µg/L	Quarterly	Grab

Chrysene	---	Report µg/L	Quarterly	Grab
Dibenzo(a,h)anthracene	---	Report µg/L	Quarterly	Grab
Indeno(1,2,3-cd)pyrene	---	Report µg/L	Quarterly	Grab
Acenaphthene	---	Report µg/L	Quarterly	Grab
Acenaphthylene	---	Report µg/L	Quarterly	Grab
Anthracene	---	Report µg/L	Quarterly	Grab
Benzo(g,h,i)perylene	---	Report µg/L	Quarterly	Grab
Fluoranthene	---	Report µg/L	Quarterly	Grab
Fluorene	---	Report µg/L	Quarterly	Grab
Naphthalene[10]	---	Report µg/L	Quarterly	Grab
Phenanthrene	---	Report µg/L	Quarterly	Grab
Pyrene	---	Report µg/L	Quarterly	Grab
WHOLE EFFLUENT TOXICITY[15, 16, 17, 18]				
LC_{50}		≥ 50 %	Quarterly	Grab
Total Residual Chlorine	---	Report mg/L	Quarterly	Grab
Salinity	---	Report g/kg	Quarterly	Grab
pH	---	Report SU	Quarterly	Grab
Total Solids	---	Report mg/L	Quarterly	Grab
Total Suspended Solids	---	Report mg/L	Quarterly	Grab
Ammonia	---	Report mg/L	Quarterly	Grab

Total Organic Carbon	---	Report mg/L	Quarterly	Grab
Cadmium	---	Report µg/L	Quarterly	Grab
Copper	---	Report µg/L	Quarterly	Grab
Lead	---	Report µg/L	Quarterly	Grab
Nickel	---	Report µg/L	Quarterly	Grab
Zinc	---	Report µg/L	Quarterly	Grab
WHOLE EFFLUENT TOXICITY TEST, RECEIVING WATER CHEMICAL ANALYSIS[18]				
Total Residual Chlorine	---	Report mg/L	Quarterly	Grab
Salinity	---	Report g/kg	Quarterly	Grab
pH	---	Report SU	Quarterly	Grab
Total Solids	---	Report mg/L	Quarterly	Grab
Total Suspended Solids	---	Report mg/L	Quarterly	Grab
Ammonia	---	Report mg/L	Quarterly	Grab
Total Organic Carbon	---	Report mg/L	Quarterly	Grab
Cadmium	---	Report µg/L	Quarterly	Grab
Copper	---	Report µg/L	Quarterly	Grab
Lead	---	Report µg/L	Quarterly	Grab
Nickel	---	Report µg/L	Quarterly	Grab
Zinc	---	Report µg/L	Quarterly	Grab

Footnotes:

[1]The grab samples for Outfall 001 shall be collected at the discharge point to the Chelsea River during the first qualifying event that occurs for each required measurement frequency, after treatment through the treatment system, free from tidal influence. A qualifying event shall be defined as a discharge that occurs during daylight hours on an outgoing tide at least one hour from both the low and high slack tide. To identify a qualifying event, the permittee may use tide charts to predict the two four-hour intervals of an outgoing tide each day that are one hour from both low and high slack tide. If a measurable discharge does not occur such that sampling cannot be completed during the first qualifying event of the required sampling frequency, the permittee is to sample the next qualifying event. The qualifying event requirement does not apply to sampling for the measurement frequency "when discharging". Changes in sampling location must be approved in writing by the U.S. Environmental Protection Agency (EPA) and the Massachusetts Department of Environmental Protection (MassDEP). Sampling of discharges from the Terminal must yield data representative of the discharge under authority of Section 308(a) in accordance with 40 Code of Federal Regulations (C.F.R.) §122.41(j), §122.44(i), and §122.48.

[2]Sampling frequency of when discharging is defined as the sampling of any measureable discharge event, reported for each calendar month. Sampling frequency of monthly is defined as the sampling of one discharge event in each calendar month. Sampling frequency of quarterly is defined as the sampling of one discharge event in each quarter. Quarters are defined as the interval of time between the months of: January through March, inclusive; April through June, inclusive; July through September, inclusive; and October through December, inclusive. The results of sampling for any parameter above its required frequency must also be reported to EPA, if it is conducted in accordance with EPA approved methods consistent with the provisions of 40 C.F.R. §122.41(1)(4)(ii). Quarterly sampling shall be performed concurrently with the monthly monitoring event. If no discharge occurs during the measurement frequencies defined above, samples shall be collected during the next qualifying event and the Permittee must report a No Data Indicator Code (e.g., "C" for "No Discharge") found in Attachment E of *NPDES Permit Program Instructions for the Discharge Monitoring Report Forms (DMRs)*, available on the EPA Region 1 web site at http://www.epa.gov/region1/enforcement/water/dmr.html.

[3]All samples shall be grab samples taken within 15 minutes of the initiation of a discharge during a qualifying event from the outfall where practicable, but in no case later than within the first hour of discharge from the outfall. All samples shall be tested in accordance with the procedures in 40 C.F.R. §136, unless specified elsewhere in the permit. The practical quantitation limit (PQL) for each analyte must be recorded. The PQL is the lowest concentration that can be reliably measured within specified limits of precision and accuracy for a specific laboratory analytical method during routine laboratory operating conditions. When an analyte is not detected above the PQL, the Permittee must report using the data qualifier signifying less than the PQL for that analyte (i.e. <0.1 µg/L, if the PQL for an analyte is 0.1 µg/L). If no discharge occurs during a monitoring period, the Permittee shall follow the No Data Indicator Code guidelines as noted above.

[4]For Flow Rate, the maximum daily value represents the maximum instantaneous flow rate measured by the Terminal as passing through the stormwater treatment system for each day that a discharge occurs during the reported period. The maximum instantaneous flow rate, which is to be reported in units of gallons per minute (GPM), shall be an estimate based on the summation of the pump curve value(s) for all pumps in operation which control the rate of flow through the stormwater treatment system when discharge is occurring. The Permittee shall at no time exceed the design flow rate of the treatment system.

[5]For Total Flow, the value reported represents the sum of the recorded discharge volume for each day that effluent is discharged during that month, using a totalizer or similar device. Total Flow shall be reported in the units of millions of gallons per month (Mgal/Mo). The Permittee shall also report the total number of days during the reporting period discharges from the outfall occurred (i.e., a measurable volume of effluent passes through the totalizer or similar device), noted on the discharge monitoring report (DMR) form under "Event Total" parameter. The required meter shall be operational no later than 180 days following the effective date of the permit. Following the effective date of the permit and until the required meter becomes operational, but no more than 180 days following the effective date of the permit, the Permittee may report Total Flow as an estimate based on the estimated flow rate and the total hours of pump operation.

[6]Requirement for State Certification.

[7]The pH of the effluent shall be in the range of 6.5 to 8.5 standard units and not more than 0.2 standard units outside of the natural background range. There shall be no change from natural background conditions that would impair any use assigned to the class of the receiving water. The Permittee may collect and submit as an attachment to the Terminal's DMR, rainwater samples collected from the Terminal in the event the permittee believes an effluent pH violation is attributable to the pH of the rainwater.

[8]The minimum level (ML) for analysis for the Volatile Organic Compound (VOC) benzene shall be no greater than 2 µg/L. The ML is not the minimum level of detection, but rather the lowest level at which the test equipment produces a recognizable signal and acceptable calibration point for an analyte, representative of the lowest concentration at which an analyte can be measured with a known level of confidence. Analysis must be completed using an EPA approved method in 40 C.F.R. §136, Table IC – Non-Pesticide Organic Compounds.

[9]The ML for analysis for the Polycyclic Aromatic Hydrocarbons (PAHs) shall be no greater than the following: 0.1 µg/L for benzo(a)pyrene and 5 µg/L for naphthalene. The ML for benzo(a)pyrene, 0.1 µg/L, shall represent the compliance level for that compound. Analysis must be completed using an EPA approved method in 40 C.F.R. §136, Table IC – Non-Pesticide Organic Compounds.

[10]The Permittee shall sample and analyze for naphthalene using analytical methods for semi-volatile organic compounds <u>and</u> volatile organic compounds. MassDEP methods may not be used.

[11]The ML for analysis for total recoverable lead shall be no greater than 0.2 µg/L. Lead analysis conducted for the wet chemistry portion of the WET test may also be submitted to satisfy the monthly sampling requirements for this parameter.

[12]Analysis must be completed for ethanol using a PQL for analysis equal to 400 µg/L or less.

[13]The Permittee shall conduct a pollutant scan quarterly for Outfall 001 for the first three years following the effective date of the permit, for the following compounds: benzo(a)anthracene, benzo(a)pyrene, benzo(b)fluoranthene, benzo(k)fluoranthene, chrysene, dibenzo(a,h)anthracene, indeno(1,2,3-cd)pyrene, acenaphthene, acenaphthylene, anthracene, benzo(g,h,i)perylene, fluoranthene, fluorene, naphthalene, phenanthrene, pyrene, benzene, toluene, ethylbenzene, total xylenes, total recoverable chromium, total recoverable iron, total cyanide, total phenol, tert-butyl alcohol, ammonia, and fecal coliform. The ML for analysis shall be no greater than the following: 0.1 µg/L for Group I PAHs, 5 µg/L for Group II PAHs, 2 µg/L for benzene, ethylbenzene, toluene and total xylenes, 1 µg/L for total recoverable chromium, 50 µg/L for total recoverable iron, 5 µg/L for total cyanide and total phenol, and 10 µg/L for tert-butyl alcohol. PAH and VOC analyses conducted for the pollutant scan may also be used to satisfy the monthly sampling requirements for those parameters as long as the timing of sampling for the remaining parameters in Part I.A.1. coincides with the quarterly sampling of selected pollutants. After three years following the effective date of the permit and 12 samples, the sampling frequency for the pollutant scan shall be reduced to 1/year. The 1/year sample for Outfall 001 shall be collected in April. Sampling shall be performed concurrently with the monthly monitoring event. After three years following the effective date of the permit and 12 samples, the Permittee may request in writing, with supporting rationale, elimination of monitoring requirements for total recoverable chromium, total recoverable iron, total cyanide, total phenol, tert-butyl alcohol, ammonia, and fecal coliform.

[14]The Permittee shall conduct a pollutant scan quarterly for the receiving water for the first three years following the effective date of the permit, for the following compounds: benzo(a)anthracene, benzo(a)pyrene, benzo(b)fluoranthene, benzo(k)fluoranthene, chrysene, dibenzo(a,h)anthracene, indeno(1,2,3-cd)pyrene, acenaphthene, acenaphthylene, anthracene, benzo(g,h,i)perylene, fluoranthene, fluorene, naphthalene, phenanthrene, pyrene, benzene, toluene, ethylbenzene, and total xylenes. The ML for analysis shall be no greater than the following: 0.1 µg/L for Group I PAHs, 5 µg/L for Group II PAHs, and 2 µg/L for benzene, ethylbenzene, toluene and total xylenes. The receiving water sample for the pollutant scan shall be collected from the Chelsea River at a point immediately outside of Outfall 001's zone of influence at a reasonably accessible location. After three years following the effective date of the permit and 12 samples, the sampling frequency for the pollutant scan shall be reduced to 1/year. The 1/year sample shall be collected in April. Sampling shall be performed concurrently with the monthly monitoring event.

[15]The Permittee shall conduct acute toxicity tests quarterly for the first three years following the effective date of the permit. The Permittee shall test the Mysid Shrimp, *Americamysis bahia*, and the Inland Silverside, *Menidia beryllina*. Toxicity test samples shall be collected for Outfall 001 during September. The test results shall be submitted by the last day of the month following the completion of the test. The tests must be performed in accordance with test procedures and protocols specified in Attachment A of this

permit. These samples, taken in accordance with the WET testing requirements, may be used to satisfy other sampling requirements specified in the table above. After three years following the effective date of the permit and 12 samples, the sampling frequency for WET testing shall be reduced to 1/year unless the Permittee requests, and subsequently receives written permission to eliminate WET testing. The 1/year sample for Outfall 001 shall be collected in September. Sampling shall be performed concurrently with the monthly monitoring event. After three years following the effective date of the permit and 12 samples, the Permittee may request in writing, with supporting rationale, elimination of monitoring requirements for whole effluent toxicity.

[16]The LC_{50} (Lethal Concentration 50 Percent) is the concentration of effluent which causes mortality to 50% of the test organisms.

[17]The dilution water sample for the WET test shall be collected from the Chelsea River at a point immediately outside of Outfall 001's zone of influence at a reasonably accessible location. If the toxicity test using receiving water as diluent shows the receiving water to be toxic or unreliable, the Permittee shall either follow procedures outlined in Attachment A – Marine Acute Toxicity Test Procedure and Protocol) Section IV., DILUTION WATER in order to obtain an individual approval for use of an alternate dilution water, or the Permittee shall follow the Self-Implementing Alternative Dilution Water Guidance which may be used to obtain automatic approval of an alternate dilution water, including the appropriate species for use with that water. This guidance is found in Attachment G of *NPDES Program Instructions for the Discharge Monitoring Report Forms (DMRs)*, which may be found on the EPA Region 1 web site at http://www.epa.gov/Region1/enforcementandassistance/dmr.html. If this guidance is revoked, the Permittee shall revert to obtaining individual approval as outlined in Attachment A. Any modification or revocation to this guidance will be transmitted to the Permittee. However, at any time, the Permittee may choose to contact EPA Region 1 directly using the approach outlined in Attachment A. For each Whole Effluent Toxicity (WET) test, the Permittee shall report the concentrations of the parameters listed above in DMRs submitted to EPA and MassDEP. Even where alternate dilution water has been agreed upon, the results of the receiving water control (0% effluent) analyses must be reported.

[18]In conjunction with each WET test, the Permittee shall report the concentrations of total residual chlorine, salinity, pH, total solids, total suspended solids, ammonia, total organic carbon, total recoverable cadmium, total recoverable copper, total recoverable lead, total recoverable nickel, and total recoverable zinc found in the 100% effluent and receiving water control (0% effluent) samples in DMRs submitted to EPA and MassDEP, noted above as Whole Effluent Toxicity and Whole Effluent Toxicity Test, Receiving Water Chemical Analysis, respectively. The ML for analysis shall be no greater than the following: 0.2 µg/L for total recoverable cadmium, total recoverable lead, and total recoverable nickel, 0.5 µg/L for total recoverable copper, and 5 µg/L for total recoverable zinc.

2. During the period beginning on the effective date and lasting through expiration, the Permittee is authorized to discharge treated groundwater through internal waste stream **Outfall Serial Number 002** to the Chelsea River via Outfall 001. Such discharge shall be limited and monitored by the Permittee as specified below:

Effluent Characteristic	**Discharge Limitation**		**Monitoring Requirements[1]**	
Parameter	**Average Monthly**	**Maximum Daily**	**Measurement Frequency[2]**	**Sample Type[3]**
FLOW RATE[4]	---	30 GPM	When Discharging	Estimate
TOTAL FLOW[5]	---	Report Mgal/Mo	When Discharging	Meter
pH RANGE[6,7]	6.5 – 8.5 SU		Monthly	Grab
VOLATILE ORGANIC COMPOUNDS (VOCs)[8]				
Benzene	---	5 µg/L	Monthly	Grab
Total BTEX	---	100 µg/L	Monthly	Grab
POLYCYCLIC AROMATIC HYDROCARBONS (PAHs)[9]				
Group I PAHs	---	0.1 µg/L	Monthly	Grab
Sum of Group I PAHs	---	10 µg/L	Monthly	Grab
Sum of Group II PAHs	---	100 µg/L	Monthly	Grab
Naphthalene[10]	---	20 µg/L	Monthly	Grab
TOTAL PETROLEUM HYDROCARBONS	---	5 mg/L	Monthly	Grab
CYANIDE[11]	---	Report µg/L	Monthly	Grab
METHYL TERT-BUTYL ETHER	---	20 µg/L	Monthly	Grab

Footnotes:

[1]The effluent samples for Outfall 002 shall be collected at the discharge point to the stormwater collection system after treatment through the groundwater treatment system, prior to mixing with any other waste stream. Changes in sampling location must be approved in writing by EPA and MassDEP. Sampling of discharges from Outfall 002 must yield data representative of the remediation waste stream and not the more dilute stormwater with which it is being mixed consistent with 40 C.F.R. §122.45(h).

[2]See Part I.A.2., Footnote 2, Page 7.

[3]See Part I.A.2., Footnote 3, Page 7.

[4]For Flow Rate, the maximum daily value represents the maximum instantaneous flow rate measured by the Terminal as passing through the groundwater treatment system for each day that a discharge occurs during the reported period. The maximum instantaneous flow rate, which is to be reported in units of GPM, shall be an estimate based on the summation of the pump curve value(s) for all pumps in operation which control the rate of flow through the treatment system when discharge is occurring. The Permittee shall at no time exceed the design flow rate of the treatment system.

[5]For Total Flow, the value reported represents the sum of the recorded discharge volume for each day that effluent is discharged during that month, measured after treatment using a totalizer or similar device. Total Flow shall be reported in the units of Mgal/Mo. The Permittee shall at no time exceed the design flow rate of the treatment system. The provision for flow meter installation and interim reporting in Part I.A.1., Footnote 5 applies.

[6]See Part I.A.1., Footnote 6, Page 8.

[7]See Part I.A.1., Footnote 7, Page 8. The rainwater sampling provision does not apply.

[8]See Part I.A.1., Footnote 8, Page 8. BTEX consists of benzene, toluene, ethylbenzene and total xylenes.

[9]See Part I.A.1., Footnote 9, Page 8. Group I PAHs consist of the following seven compounds: benzo(a)anthracene, benzo(a)pyrene, benzo(b)fluoranthene, benzo(k)fluoranthene, chrysene, dibenzo(a,h)anthracene, and indeno(1,2,3-cd)pyrene. The effluent limitation of 0.1 µg/L applies to each individual Group I PAH compound. Group II PAHs consist of the following nine compounds: acenaphthene, acenaphthylene, anthracene, benzo(g,h,i)perylene, fluoranthene, fluorene, naphthalene, phenanthrene, and pyrene.

[10]See Part I.A.1., Footnote 10, Page 8.

[11]The ML for analysis shall be no greater than 5 µg/L for total cyanide.

PART I.A. (continued)

3. The discharge shall not cause a violation of the Massachusetts water quality standards of the receiving water.
4. The effluent shall not impart taste, odor, turbidity, toxicity, radioactivity, or other properties which cause those waters to be unsuitable for the designated uses and characteristics ascribed to their use.
5. The effluent shall not cause objectionable discoloration of the receiving waters.
6. The effluent shall contain neither a visible oil sheen, foam, nor floating or settleable solids at any time.
7. The effluent shall not contain materials in concentrations or in combinations which would impair the uses designated by the classification of the receiving water or which would cause or contribute to alterations that adversely affect the physical or chemical nature of the bottom.
8. The effluent must not lower the quality of any classified body of water below such classification, or lower the existing quality of any body of water if the existing quality is higher than the classification.
9. The Permittee shall report immediately the appearance of any size sheen attributable to the discharge from the Terminal to the appropriate U.S. Coast Guard Officer in accordance with Section 311 of the Clean Water Act (CWA). This requirement is in addition to any reporting requirements contained in the permit.
10. The Permittee shall inspect, operate, and maintain the stormwater and groundwater treatment systems at the Terminal to ensure that the Effluent Limitations and permit conditions are met. The Permittee shall ensure that all components of the Terminal's Stormwater Pollution Prevention Plan (SWPPP), including those Best Management Practices (BMPs) which specifically address the operation and maintenance of the oil/water separator (OWS), pumps and other components of the stormwater collection and stormwater and groundwater treatment systems, are complied with.
11. The Permittee shall not discharge any toxic pollutant or material including, but not limited to, chemicals (e.g., surfactants, disinfectant agents, detergents, emulsifiers), chemical additives, or bioremedial agents, including microbes, which was not reported in the permit application. Pollutants which are not limited by this permit, but which have been specifically disclosed in the permit application, may be discharged up to the frequency and level disclosed in the application, provided that such discharge does not violate Section 307 or 311 of the CWA or applicable state water quality standards.
12. The Permittee shall notify EPA and MassDEP at the addresses in Part I.F. when it proposes to add or replace any chemicals, chemical additives, or bioremedial agents that have the potential to come into contact with stormwater or enter the collection and treatment system.
13. The Permittee shall notify EPA and MassDEP in writing to the addresses listed in Part I.F. within 10 days of becoming aware of any changes, planned or otherwise, in the operations at the Terminal that may have an effect on the permitted discharge.
14. The Permittee shall attach a copy of the laboratory case narrative to each DMR submitted to EPA and MassDEP for each reporting period. The laboratory case narrative shall include a copy of the laboratory data sheets for each analysis (identifying the test method, the analytical results, and the detection limits for each analyte) and provide a brief discussion of whether all appropriate QA/QC procedures were met and were within acceptable limits.
15. Written notification and approval by EPA and the MassDEP shall be required, should the Permittee propose changes to the stormwater collection or stormwater and/or groundwater

treatment systems, which have the potential to cause the maximum design flow rate through any component of the stormwater and/or groundwater system to be exceeded.

16. Hydrostatic test water shall be monitored as described below and treated through the stormwater treatment system prior to being discharged through Outfall 001 to the Chelsea River, and is subject to the Effluent Limitations in Part I.A.1., above.
    a. The flow of hydrostatic test water into the stormwater treatment system shall be controlled to prevent it from exceeding the maximum design flow rate of the system (i.e., 600 GPM).
    b. The Permittee shall take a minimum of three representative samples of the hydrostatic test water:
        i. For Tanks, the Permittee shall take:
            1) one grab sample of the influent (fill source) water during the first 10% of the estimated fill segment time at the intake if the fill source is not municipal water supply; and
            2) three grab samples of the effluent (at the discharge point for the treatment system), one sample during the first 10% of discharge, one sample at the approximate midpoint of discharge, and one sample during the last 10% of discharge after treatment.
        ii. For Pipelines, the Permittee shall take:
            1) one grab sample of the influent (fill source) water during the first 10% of the estimated fill segment time at the intake if the fill source is not municipal water supply; and
            2) three grab samples of the effluent (at the discharge point for the treatment system), one sample during the first 10% of discharge , one sample at the approximate midpoint of discharge, and one sample during the last 10% of discharge after treatment.
    c. The grab sample required in Part I.A.16.b.i. and ii. shall be analyzed as noted below. The hydrostatic test water shall only be discharged if, after appropriate management and treatment, all permit conditions shall be met. If at any time the analyses at any point in the hydrostatic testing process demonstrate that the discharge water quality is not consistent with the effluent limitations and requirements established in this permit, the Permittee shall immediately halt the transfer of hydrostatic test water and take steps to remedy the situation. The influent, when required, and effluent samples shall each be analyzed for the parameters indicated below:
        i. Total Flow;
        ii. Flow Rate;
        iii. Total Suspended Solids (TSS);
        iv. Oil & Grease (O&G);
        v. pH;
        vi. Chemical Oxygen Demand (COD);
        vii. Dissolved Oxygen (DO);
        viii. Total Surfactants;
        ix. VOCs (benzene, toluene, ethylbenzene, and total xylenes);
        x. PAHs (Group I and II PAHs listed in Part I.A.1., Pollutant Scan, Effluent, benzo(a)anthracene through pyrene); Metals (total recoverable iron, total

recoverable chromium, and total recoverable metals listed in Part I.A.1., Whole Effluent Toxicity, cadmium through zinc);

xi. Ethanol, if tank or line has been used to store and/or convey ethanol and/or petroleum products containing ethanol within the previous year; and

xii. Total Residual Chlorine, if potable water or a similar source of water which is likely to contain residual chlorine concentrations is used for hydrostatic testing.

d. The hydrostatic test waters released from the tank(s) and/or pipelines and treated through the stormwater treatment system shall satisfy all conditions of this permit, including meeting all discharge limitations, analytical method requirements and detection limits. The samples required in Part I.A.16.b.i.2) and ii.2) may be used to satisfy the requirements in Part I.A.1. for the parameters required in both parts for the monitoring period in which hydrostatic testing occurs, as long as the timing of sampling for the remaining parameters in Part I.A.1. coincides with the sampling of hydrostatic test water effluent.

e. The Permittee shall submit a letter/report to EPA and the MassDEP, summarizing the results of the hydrostatic test **within 90 days of completion of the test**. This report shall contain:

i. The date(s) during which the hydrostatic testing occurred;

ii. The volume of hydrostatic test water discharged;

ii. A copy of the laboratory data sheets for each analysis, providing the test method, the detection limits for each analyte, and a brief discussion of whether all appropriate QA/QC procedures were met and were within acceptable limits; and

iii. A brief discussion of the overall test results and how they relate to the Effluent Limitations in this permit.

f. EPA shall reserve the right to re-open the permit, in accordance with 40 C.F.R. §122.62(a)(2), to examine hydrostatic test water discharges in the event that sampling results indicate that the standards for the assigned classification of the Chelsea River might not be attained.

17. All existing manufacturing, commercial, mining, and silvicultural dischargers must notify the Director as soon as they know or have reason to believe (40 C.F.R. §122.42):

a. That any activity has occurred or will occur which would result in the discharge, on a routine or frequent basis, of any toxic pollutant which is not limited in the permit, if that discharge will exceed the highest of the following “notification levels”:

i. 100 micrograms per liter (µg/L);

ii. 200 µg/L for acrolein and acrylonitrite; 500 µg/L for 2,4-dinitrophenol; and one milligram per liter (mg/L) for antimony;

iii. Five times the maximum concentration value reported for that pollutant in the permit application in accordance with 40 C.F.R. §122.21(g)(7); or

iv. Any other notification level established by the Director in accordance with 40 C.F.R. §122.44(f) and Massachusetts regulations.

b. That any activity has occurred or will occur which would result in the discharge, on a non-routine or infrequent basis, of any toxic pollutant which is not limited in the permit, if that discharge will exceed the highest of the following "notification levels”:

i. 500 micrograms per liter (µg/L);

ii. One milligram per liter (mg/L) for antimony;

iii. 10 times the maximum concentration value reported for that pollutant in the permit application in accordance with 40 C.F.R. §122.21(g)(7); or
iv. Any other notification level established by the Director in accordance with 40 C.F.R. §122.44(f) and Massachusetts regulations.

c. That they have begun or expect to begin to use or manufacture as an intermediate or final product or byproduct any toxic pollutant which was not reported in the permit application.

18. Numerical Effluent Limitations for Toxicants
    a. EPA or MassDEP may use the results of the chemical analyses conducted pursuant to this permit, as well as national water quality criteria developed pursuant to Section 304(a)(1) of the CWA, state water quality criteria, and any other appropriate information or data, to develop numerical effluent limitations for any pollutants, including, but not limited to, those pollutants listed in Appendix D of 40 C.F.R. §122.
19. Toxics Control
    a. The Permittee shall not discharge any pollutant or combination of pollutants in toxic amounts.
    b. Any toxic components of the effluent shall not result in any demonstrable harm to aquatic life or violate any state or federal water quality standard which has been or may be promulgated. Upon promulgation of any such standard, this permit may be revised or amended in accordance with such standards.

B. ADDITIONAL ALLOWABLE DISCHARGES AND UNAUTHORIZED DISCHARGES

1. This permit authorizes the Permittee to discharge only in accordance with the terms and conditions of this permit and only from the outfalls listed in Part I.A.1., and Part I.A.2. of this permit. Discharges of wastewater from any other point sources which are not authorized by this permit or other NPDES permits shall be reported in accordance with Part D.1.e.(1) of the Standard Conditions of this permit (twenty-four hour reporting).
2. The Permittee is authorized to discharge only the effluent types listed in Parts I.A.1., and Part I.A.2. with the exception of the following discharges allowable under this permit, provided these discharges meet all effluent limitations in the permit:
    a. Discharges from fire-fighting activities.
    b. Fire hydrant flushings.
    c. Potable water (e.g., water line flushings) unless associated with hydrostatic testing.
    d. Uncontaminated condensate from air conditioners, coolers, and other compressors and from the outside storage of refrigerated gases or liquids.
    e. Irrigation drainage.
    f. Landscape watering provided all pesticides, herbicides, and fertilizer have been applied in accordance with the approved labeling.
    g. Pavement wash waters where no detergents are used and no spills or leaks of toxic or hazardous materials have occurred or could occur.
    h. Routine external building washdown that does not use detergents.
    i. Uncontaminated groundwater.
    j. Foundation or footing drains where flows are not contaminated with process materials.

k. Incidental windblown mist from boilers and/or cooling towers that collects on rooftops or adjacent portions of the Terminal, but not intentional discharges from these structures (e.g., blowdown or drains).

3. The following discharges are expressly prohibited:
    a. There shall be no discharge of tank bottom water and/or bilge water alone or in combination with stormwater discharge or other wastewater.
    b. There shall be no discharge of any sludge and/or bottom deposits from any storage tank(s), basin(s), and/or diked area(s) to the receiving waters. Examples of storage tanks and/or basins include, but are not limited to: primary catch basins, oil/water separators, petroleum product storage tanks, baffled storage tanks collecting spills, and tank truck loading rack sumps.
    c. Discharge of additives, including, but not limited to: glutaraldehyde, ethylene glycol, butoxyethanol, alkylacrelate nitrito styrene polymer, coco alkylamine, 1,2,3 and 4-trimethylbenzene, 1,3,5-trimethylbenzene and methyl isobutyl ketone.
    d. Any effluent containing fire protection foam, either in concentrate form or as foam diluted with water.
    e. The bypass of the stormwater treatment system of stormwater runoff, hydrostatic test water, or any discharge following accidental release of reportable quantities of petroleum products is prohibited except where necessary to avoid loss of life, personal injury, or severe property damage. Each bypass shall be sampled for all the effluent characteristics identified in Part I.A.1. of this permit (i.e. monthly and quarterly) and the results reported to EPA within 45 days of the initiation of the bypass. These bypass reporting requirements are in addition to those already identified in 40 C.F.R. §122.41(m) and Part II.B.4. of the Standard Conditions of this permit.
    f. Runoff resulting from accidental spill or release, excepting conditions that meet the requirements defined in Part II., the Standard Conditions.

C. NON-NUMERIC TECHNOLOGY-BASED EFFLUENT LIMITATIONS AND ADDITIONAL REQUIREMENTS

1. Control measures (including BMPs) shall be selected, designed, installed, and implemented at the Terminal to minimize the discharge of pollutants in stormwater to waters of the United States. At a minimum, these BMPs shall be consistent with the control measures described in the current EPA Multi-Sector General Permit (MSGP) (effective May 27, 2009). Specifically, BMPs must be selected and implemented to satisfy the following non-numeric technology-based effluent limitations:
    a. Minimization of exposure of manufacturing, processing, and material storage areas to stormwater discharges;
    b. Good housekeeping and/or control measures designed to maintain areas that are potential sources of pollutants, including, but not limited to, contaminated soil and groundwater, and petroleum product blending and dispensing appurtenances;
    c. Preventative maintenance programs to avoid leaks, spills, and other releases of pollutants in stormwater discharged to receiving waters;
    d. Spill prevention and response procedures to ensure effective response to spills and leaks if or when they occur including proper procedures for cleanup water segregation;

   e. Erosion and sediment controls designed to stabilize exposed areas and contain runoff using structural and/or non-structural control measures to minimize onsite erosion and sedimentation, and the resulting discharge of pollutants;
   f. Runoff and run-on management practices to divert, infiltrate, reuse, contain, or otherwise reduce stormwater runoff;
   g. Proper protocols for hydrostatic testing;
   h. Proper handling procedures for tank bottom water;
   i. Proper handling procedures for salt or materials containing chlorides that are used for snow and ice control;
   j. Appropriate application practices for any herbicide used to control nuisance vegetation;
   k. Proper handling procedures for ethanol storage and response procedures for releases of ethanol or materials that are used for ethanol spill or fire control. This must include specific provisions for the treatment of ethanol, should release occur, taking into account the analytical challenges for monitoring this compound and the limited effectiveness of an OWS and/or granular activated carbon in treating this compound; and
   l. Sector specific non-numeric technology-based effluent limitations and/or BMPs included in Sector AD – Non-Classified Facilities in the current MSGP (effective May 27, 2009).

2. The selection, design, installation, and implementation of control measures must be in accordance with good engineering practices and manufacturer's specifications. The Permittee must include sector-specific BMPs included in Sector AD – Non-Classified Facilities in the current MSGP (effective May 27, 2009). When selecting and designing control measures (including BMPs), the Permittee must address design considerations consistent with Part 2.1.1. of the current MSGP (effective May 27, 2009).
3. The Permittee shall implement a discharge practices BMP that minimizes the extent to which discharges from the Terminal occur under worst-case conditions in the receiving water, meets the requirements of a qualifying event as specified in Part I.A.1., and limits the runoff, run-on and re-entrainment of pollutants. This BMP must include, to the maximum extent practicable:
   a. A detailed process for the initiation of discharge which identifies the conditions which meet the requirements of a qualifying event (i.e., outgoing tide, daylight hours), and the methods for avoiding worst-case conditions (i.e., approximately one hour before and after slack tides), and conditions under which discharges should not occur (i.e., visible sheen observed, receiving water low flow conditions and/or site-specific factors);
   b. An assessment of the site-specific factors that increase the potential to contribute pollutants to stormwater (e.g., recent spills, contaminated soil or groundwater, flooding or otherwise elevated water table, Terminal construction and/or maintenance);
   c. The examination of alternate procedures or improvements to current procedures that increase the efficiency of pollutant removal prior to the wastewater discharge to surface waters, reduce the potential to contribute pollutants to stormwater by incorporating practices including, but not limited to, 2/year sweeping of paved surfaces, and yield data representative of discharges from the Terminal and the receiving water required in Part I.A.1.;

   d. Coordination of sample timing with other bulk petroleum storage facilities that discharge to the Chelsea River; and
   e. To the extent the Permittee determines any portion of this BMP is impracticable, the SWPPP must provide an evaluation and explanation to support this determination.

4. The Permittee shall implement a spill control BMP which prevents, to the maximum extent achievable, discharges of accidentally released petroleum products to the Chelsea River through Outfall 001. This program may cross-reference any applicable component of the Terminal's Spill Prevention Control and Countermeasure Plan, where appropriate, and shall include, at a minimum:
   a. The specific response actions taken as a result of a spill of reportable quantities at the Terminal;
   b. The process for notifying EPA, MassDEP, the U.S. Coast Guard, and/or the City of Boston, as required; and
   c. A list of significant spills (i.e., reportable quantities) and significant leaks of toxic or hazardous pollutants that occurred at the Terminal **as of the effective date of this Permit to the present** and is maintained to include up-to-date information. This list shall be provided to EPA and/or MassDEP upon request.
5. The Permittee shall implement a stormwater system BMP that provides confirmation of the integrity of stormwater system components and assesses the level of infiltration of contaminated groundwater into stormwater or components that convey stormwater. This must include, to the maximum degree practicable:
   a. Identification of stormwater system components potentially located below the annual high groundwater table; and
   b. Confirmation of stormwater system integrity provided with the first annual SWPPP certification following implementation of this BMP; data gathered through appropriate measures that confirms the level of groundwater infiltration, if any, must be documented in the SWPPP and should include, as appropriate:
      i. Visual or video inspection of the readily accessible portions of the stormwater system installed below grade;
      ii. Direct measurement of the flow rate, direction and pollutant concentrations for the pollutants listed in Part I.A.1., Pollutant Scan, Effluent, at five separate existing groundwater monitoring points representative of groundwater conditions at the Terminal, including known areas of contamination;
      iii. Direct measurement of the flow rate and pollutant concentrations for the pollutants listed in Part I.A.1., Pollutant Scan, Effluent, at a minimum of five separate accumulation points within the stormwater system that are likely susceptible to groundwater infiltration including points located in known areas of contamination collected during dry weather absent of tidal influence; and
      iv. Direct measurement of the flow rate and pollutant concentrations for the pollutants listed in Part I.A.1., Pollutant Scan, Effluent, of stormwater runoff into the stormwater system at a minimum of five separate accumulation points within the stormwater system that are likely attributable to overland flow of precipitation collected during wet weather absent of tidal influence.
6. The Permittee shall conduct facility inspections. All areas with industrial materials or activities exposed to stormwater and all structural control used to comply with effluent limits

in this permit shall be inspected, at least once per quarter, by qualified personnel with one or more members of the stormwater pollution prevention team. Inspections shall begin during the first full calendar quarter after the effective date of this permit. EPA considers quarters as follows: January to March; April to June; July to September; and October to December. Each inspection must include a visual assessment of stormwater samples (from the outfall), which shall be collected within the first 15 minutes of discharge, stored in a clean, clear glass or plastic container, and examined in a well-lit area for the following water quality characteristics: color, odor, clarity, floating solids, settled solids, suspended solids, foam, oil sheen, and other obvious indicators of pollution.

7. The Permittee shall take corrective action(s) as required below.
    b. If any of the following conditions occur, the Permittee must review and revise the selection, design, installation, and implementation of control measures (including BMPs) to ensure that the condition is eliminated and will not be repeated in the future:
        i. an unauthorized release or discharge or a release of a reportable quantity of pollutants as described in 40 C.F.R. §302;
        ii. a discharge violates any permit condition, including a numeric effluent limit;
        iii. a determination by the Permittee or EPA that the control measures (including BMPs) appear to be ineffective in achieving the general objectives of controlling pollutants in discharges or are not stringent enough for the discharge to meet applicable water quality standards;
        iv. an inspection or evaluation of the Terminal by an EPA official, or local, State, or Tribal entity, determines that modifications to the control measures are necessary to meet the non-numeric effluent limits in this permit; or
        v. a finding by the Permittee during a quarterly inspection that control measures are not being properly operated and maintained.
    c. If any of the following conditions occur, the Permittee must review the selection, design, installation, and implementation of control measures (including BMPs) to determine if modifications are necessary to meet the effluent limits in this permit:
        i. a change in design, construction, operation, or maintenance, materials storage, or activities at the Terminal that significantly changes the nature of pollutants discharged in stormwater from the Terminal, or significantly increases the quantity of pollutants discharged; or
        ii. new data identifies the integrity of the stormwater system and level of groundwater infiltration into the stormwater system.
    d. If the Permittee determines that changes are necessary, any modifications to control measures (including BMPs) must be made before the next discharge if possible, or as soon as practicable following that discharge.

D. STORMWATER POLLUTION PREVENTION PLAN

1. The Permittee shall develop, implement and maintain a SWPPP designed to reduce or prevent the discharge of pollutants to waters of the United States. The SWPPP shall be a written document that is consistent with the terms of the permit and the current MSGP (effective May 27, 2009). The SWPPP must identify and describe the control measures (including BMPs) employed by the Terminal for all structural and/or operational controls used to control discharges from Outfall 001.

2. The SWPPP shall be updated and certified by the Permittee **within 90 days of the effective date of this permit**. The Permittee shall certify that the SWPPP has been prepared, that it meets the requirements of this permit, and that it reduces the pollutants in the discharge to the extent practicable. The SWPPP and certification shall be signed in accordance with the requirements identified in 40 C.F.R. §122.22. The Permittee shall, if practicable, post a copy of the Terminal's SWPPP in portable document format to the Permittee's publicly-accessible website. The location of this document (i.e., a valid, direct hyperlink) must be provided to EPA and MassDEP with the Permittee's certification. A copy of the SWPPP and certification shall be maintained at the Terminal and made available to EPA, MassDEP and/or the City of Boston upon request.
3. The SWPPP shall be prepared in accordance with good engineering practices and shall be consistent with the general provisions for SWPPPs included in the current MSGP (effective May 27, 2009). In the current MSGP, the general SWPPP provisions are included in Part 5. and Part 8.AD., and are specified, in part, above. Specifically, the SWPPP shall document the selection, design, and installation, and implementation of control measures and contain the elements listed below:
    a. A pollution prevention team with collective and individual responsibilities for developing, implementing, maintaining, revising and ensuring compliance with the SWPPP;
    b. A site description which includes the activities at the Terminal; a general location map showing the Terminal, receiving waters, and outfall locations; and a site map showing the extent of significant structures and impervious surfaces, directions of stormwater flows, and locations of all existing structural control measures, stormwater conveyances, pollutant sources (identified in Part I.D.3.c. below), stormwater monitoring points, stormwater inlets and outlets, and industrial activities exposed to precipitation such as storage, disposal, and material handling;
    c. A summary of all pollutant sources which includes a list of activities exposed to stormwater, the pollutants associated with these activities, a description of where spills have occurred or could occur, a description of non-stormwater discharges, and a summary of any existing stormwater or non-stormwater discharge sampling data;
    d. A description of all stormwater controls, both structural and non-structural;
    e. A schedule and procedure for implementation and maintenance of the control measures, BMPs, quarterly inspections and corrective actions described in Part I.C. above; and
    f. Sector specific SWPPP provisions included in Sector AD – Non-Classified Facilities in the current MSGP (effective May 27, 2009).
4. The Permittee shall amend and update the SWPPP **within 14 days** for any changes at the Terminal that result in a significant effect on the potential for the discharge of pollutants to the waters of the United States or that affect the SWPPP. Such changes may include, but are not limited to those listed in Part I.C.7. Any amended, modified, or new versions of the SWPPP shall be re-certified and signed by the Permittee in accordance with the requirements identified in Part. I.D.2. above.
5. The SWPPP shall document the control measures (including BMPs) implemented or to be implemented at the Terminal to meet the non-numeric technology-based effluent limitations in Part I.C., and the information specified below for inspections, and corrective action(s).

a. The Permittee shall document the following information for each inspection and maintain the records along with the SWPPP:
    i. The date and time of the inspection and at which any samples were collected;
    ii. The name(s) and signature(s) of the inspector(s)/sample collector(s);
    iii. If applicable, why it was not possible to take samples within the first 15 minutes;
    iv. Weather information and a description of any discharges occurring at the time of the inspection;
    v. Results of observations of discharges, including any observed discharges of pollutants and the probable sources of those pollutants;
    vi. Any control measures and/or treatment system components needing maintenance, repairs or replacement; and
    vii. Any additional control measures needed to comply with the permit requirements.

b. For corrective actions, the Permittee shall document conditions included in Part I.C.7.a. and b. **within 24 hours** of identifying such conditions. The Permittee shall document any corrective action(s) to be taken, or if no corrective action is needed, the basis for that determination, **within 14 days** of identifying such conditions. The Permittee shall document the following information, at a minimum:
    i. Identification of the condition triggering the need for corrective action review;
    ii. Description of the problem identified; and
    iii. Date the problem was identified.
    iv. Summary of corrective action taken or to be taken (or, where you determine that corrective action is not necessary, the basis for this determination);
    v. Notice of whether SWPPP modifications are required as a result of this discovery or corrective action;
    vi. Date corrective action initiated; and
    vii. Date corrective action completed or expected to be completed.

6. The Permittee shall certify **at least annually** that the Terminal is in compliance with the SWPPP requirement. If the Terminal is not in compliance with any aspect of the SWPPP requirement, the annual certification shall state the non-compliance and the remedies which are being undertaken. Such annual certifications also shall be signed in accordance with the requirements identified in Part. I.D.2. above.
7. The Permittee shall certify, **at least annually**, that the previous year's inspections and maintenance activities were conducted, results recorded, records maintained, and that the Terminal is in compliance with this permit. Such annual certifications also shall be signed in accordance with the requirements identified in Part. I.D.2. above. If the Terminal is not in compliance with any aspect of this permit, the annual certification shall state the non-compliance and the remedies which are being undertaken. The Permittee shall document in the SWPPP any violation of numeric or non-numeric effluent limitations with a date and description of the corrective actions taken.
8. The Permittee shall keep a copy of the current SWPPP and all SWPPP certifications (the initial certification, recertification, and annual certifications) signed during the effective period of this permit at the Terminal and shall make it available for inspection by EPA and/or MassDEP.

9. The SWPPP must be consistent with the terms of this permit, similar plans, and requirements of Section 311 of the CWA.

E. REOPENER CLAUSE

1. This permit may be modified, or revoked and reissued in accordance with 40 C.F.R. §122.62. The reason for modification or revocation may include, but is not limited to:
    a. Material and substantial alterations or additions to the Terminal or activity have occurred.
    b. New information is received which was not available at the time of permit issuance and that would have justified the application of different permit conditions at the time of issuance.
    c. An applicable effluent standard or limitation is issued or approved under Sections 301(b)(2)(C) and (D), 304(b)(2), and 307(a)(2) of the CWA, which:
        i. Contains different conditions or is otherwise more stringent than any effluent limitation in this permit; or
        ii. Controls any pollutant not limited by this permit.
2. If the permit is modified or reissued, it shall be revised to reflect all currently applicable requirements of the CWA.

F. MONITORING AND REPORTING

1. **For a period of six months from the effective date of the permit**, the Permittee may either submit monitoring data and other reports to EPA in hard copy form or report electronically using NetDMR, a web-based tool that allows permittees to electronically submit DMRs and other required reports via a secure internet connection. **Beginning no later than six months after the effective date of the permit**, the Permittee shall begin reporting using NetDMR, unless the Terminal is able to demonstrate a reasonable basis that precludes the use of NetDMR for submitting DMRs and reports. Specific requirements regarding submittal of data and reports in hard copy form and for submittal using NetDMR are described below:
    a. Submittal of Reports Using NetDMR:
        i. NetDMR is accessed from: http://www.epa.gov/netdmr. **Within six months of the effective date of this permit**, the Permittee shall begin submitting DMRs and reports required under this permit electronically to EPA using NetDMR, unless the Terminal is able to demonstrate a reasonable basis, such as technical or administrative infeasibility, that precludes the use of NetDMR for submitting DMRs and reports ("opt-out request"). DMRs shall be submitted electronically to EPA no later than the **15th day of the month** following the completed reporting period;
        ii. All reports required under the permit shall be submitted to EPA as an electronic attachment to the DMR. A permittee submitting reports using NetDMR is no longer required to submit hard copies of DMRs or other reports to EPA, with the exception of a duplicate copy of the hydrostatic test summary letter/report noted below, and no longer required to submit hard copies of DMRs to MassDEP. However, permittees shall continue to send hard copies of reports

other than DMRs (including Hydrostatic Test Summary Letter/Report, and Toxicity Test Results) to MassDEP until further notice from MassDEP; and

iii. The Permittee shall, if practicable, post a copy of the Terminal's DMR data in portable document format to the Permittee's publicly-accessible website in conjunction with submission of DMRs via NetDMR. The location of these documents (i.e., a valid, direct hyperlink) must be consistent with the location of the Terminal's publicly-accessible SWPPP, specified in Part I.D.

b. Submittal of NetDMR Opt-Out Requests:
Opt-out requests must be submitted in writing to EPA for written approval **at least 60 days** prior to the date a Terminal would be required under this permit to begin using NetDMR. This demonstration shall be valid for six months from the date of EPA approval and shall thereupon expire. At such time, DMRs and reports shall be submitted electronically to EPA unless the Permittee submits a renewed opt-out request and such request is approved by EPA. All opt-out requests should be sent to the following addresses:

Attn: NetDMR Coordinator
U.S. Environmental Protection Agency, Water Technical Unit
5 Post Office Square, Suite 100 (OES04-1)
Boston, MA 02109-3912

And

Massachusetts Department of Environmental Protection
Surface Water Discharge Permit Program
1 Winter Street, 5th Floor
Boston, Massachusetts 02108

c. Submittal of Reports in Hard Copy Form:

i. Monitoring results shall be summarized for each calendar month and reported on separate hard copy DMRs postmarked no later than the 15th day of the month following the completed reporting period. All reports required under this permit shall be submitted as an attachment to the DMRs, with the exception of a duplicate copy of the hydrostatic test summary letter/report noted below. Signed and dated originals of the **DMRs, and all other reports or notifications DMRs (if opting out of NetDMR),** required herein or in Part II shall be submitted to the Director at the following address:

U.S. Environmental Protection Agency
Water Technical Unit (OES04-SMR)
5 Post Office Square - Suite 100
Boston, MA 02109-3912

ii. A duplicate signed copy of each **hydrostatic test summary letter/report** required in Part I.A.16.e., **shall be submitted** to EPA at the following address:

U.S. Environmental Protection Agency
Industrial Permits Section (OEP06-1)
5 Post Office Square - Suite 100
Boston, MA 02109-3912

iii. Duplicate signed copies of **DMRs (if opting out of NetDMR), and all other reports or notifications** required above, shall be submitted to the State at the following address:

Massachusetts Department of Environmental Protection
Bureau of Waste Prevention
Northeast Regional Office
205B Lowell Street
Wilmington, Massachusetts 01887

iv. And, **WET Test reports ONLY**, to the State at the following address:

Massachusetts Department of Environmental Protection
Surface Water Discharge Permit Program
8 New Bond Street
Worcester, Massachusetts 01606

d. Any verbal reports, if required in Parts I. and/or II. of this permit, shall be made to both EPA Region 1 and to MassDEP.

G. STATE PERMIT CONDITIONS

1. This authorization to discharge includes two separate and independent permit authorizations. The two permit authorizations are (i) a federal National Pollutant Discharge Elimination System permit issued by the U.S. Environmental Protection Agency (EPA) pursuant to the Federal Clean Water Act, 33 U.S.C. §§1251 et seq.; and (ii) an identical state surface water discharge permit issued by the Commissioner of the Massachusetts Department of Environmental Protection (MassDEP) pursuant to the Massachusetts Clean Waters Act, M.G.L. c. 21, §§26-53, and 314 C.M.R. 3.00. All of the requirements contained in this authorization, as well as the standard conditions contained in 314 C.M.R. 3.19, are hereby incorporated by reference into this state surface water discharge permit.
2. This authorization also incorporates the state water quality certification issued by MassDEP under §401(a) of the Federal Clean Water Act, 40 C.F.R. 124.53, M.G.L. c. 21, §27 and 314 C.M.R. 3.07. All of the requirements (if any) contained in MassDEP's water quality certification for the permit are hereby incorporated by reference into this state surface water discharge permit as special conditions pursuant to 314 C.M.R. 3.11.
3. Each Agency shall have the independent right to enforce the terms and conditions of this permit. Any modification, suspension or revocation of this permit shall be effective only with respect to the Agency taking such action, and shall not affect the validity or status of this permit as issued by the other Agency, unless and until each Agency has concurred in writing with such modification, suspension or revocation. In the event any portion of this permit is declared, invalid, illegal or otherwise issued in violation of State law such permit shall remain

in full force and effect under Federal law as an NPDES permit issued by the U.S. Environmental Protection Agency. In the event this permit is declared invalid, illegal or otherwise issued in violation of Federal law, this permit shall remain in full force and effect under State law as a permit issued by the Commonwealth of Massachusetts.

ATTACHMENT A

MARINE ACUTE
TOXICITY TEST PROCEDURE AND PROTOCOL

I. GENERAL REQUIREMENTS

The permittee shall conduct acceptable acute toxicity tests in accordance with the appropriate test protocols described below:

- **2007.0 - Mysid Shrimp (Americamysis bahia) definitive 48 hour test.**
- **2006.0 - Inland Silverside (Menidia beryllina) definitive 48 hour test.**

Acute toxicity data shall be reported as outlined in Section VIII.

II. METHODS

The permittee shall use the most recent 40 CFR Part 136 methods. Whole Effluent Toxicity (WET) Test Methods and guidance may be found at:

http://water.epa.gov/scitech/methods/cwa/wet/index.cfm#methods

The permittee shall also meet the sampling, analysis and reporting requirements included in this protocol. This protocol defines more specific requirements while still being consistent with the Part 136 methods. If, due to modifications of Part 136, there are conflicting requirements between the Part 136 method and this protocol, the permittee shall comply with the requirements of the Part 136 method.

III. SAMPLE COLLECTION

A discharge and receiving water sample shall be collected. The receiving water control sample must be collected immediately upstream of the permitted discharge's zone of influence. The acceptable holding times until initial use of a sample are 24 and 36 hours for on-site and off-site testing, respectively. A written waiver is required from the regulating authority for any holding time extension. Sampling guidance dictates that, where appropriate, aliquots for the analysis required in this protocol shall be split from the samples, containerized and immediately preserved, or analyzed as per 40 CFR Part 136. EPA approved test methods require that samples collected for metals analyses be preserved immediately after collection. Testing for the presence of total residual chlorine[1] (TRC) must be analyzed immediately or as soon as possible, for all effluent samples, prior to WET testing. TRC analysis may be performed on-site or by the toxicity testing laboratory and the samples must be dechlorinated, as necessary, using sodium thiosulfate

[1] For this protocol, total residual chlorine is synonymous with total residual oxidants.

prior to sample use for toxicity testing. If performed on site the results should be included on the chain of custody (COC) presented to WET laboratory.

Standard Methods for the Examination of Water and Wastewater describes dechlorination of samples (APHA, 1992). Dechlorination can be achieved using a ratio of 6.7 mg/L anhydrous sodium thiosulfate to reduce 1 mg/L chlorine. If dechlorination is necessary, a thiosulfate control consisting of the maximum concentration of thiosulfate used to dechlorinate the sample in the toxicity test control water must also be run in the WET test.

All samples submitted for chemical and physical analyses will be analyzed according to Section VI of this protocol. Grab samples must be used for pH, temperature, and total residual chlorine (as per 40 CFR Part 122.21).

All samples held for use beyond the day of sampling shall be refrigerated and maintained at a temperature range of 0-6° C.

IV. DILUTION WATER

Samples of receiving water must be collected from a reasonably accessible location in the receiving water body immediately upstream of the permitted discharge's zone of influence. Avoid collection near areas of obvious road or agricultural runoff, storm sewers or other point source discharges and areas where stagnant conditions exist. EPA strongly urges that screening for toxicity be performed prior to the set up of a full, definitive toxicity test any time there is a question about the test dilution water's ability to achieve test acceptability criteria (TAC) as indicated in Section V of this protocol. The test dilution water control response will be used in the statistical analysis of the toxicity test data. All other control(s) required to be run in the test will be reported as specified in the Discharge Monitoring Report (DMR) Instructions, Attachment F, page 2,Test Results & Permit Limits.

The test dilution water must be used to determine whether the test met the applicable TAC. When receiving water is used for test dilution, an additional control made up of standard laboratory water (0% effluent) is required. This control will be used to verify the health of the test organisms and evaluate to what extent, if any, the receiving water itself is responsible for any toxic response observed.

If dechlorination of a sample by the toxicity testing laboratory is necessary a "sodium thiosulfate" control, representing the concentration of sodium thiosulfate used to adequately dechlorinate the sample prior to toxicity testing, must be included in the test.

If the use of alternate dilution water (ADW) is authorized, in addition to the ADW test control, the testing laboratory must, for the purpose of monitoring the receiving water, also run a receiving water control.

If the receiving water is found to be, or suspected to be toxic or unreliable, ADW of known quality with hardness similar to that of the receiving water may be substituted. Substitution is

species specific meaning that the decision to use ADW is made for each species and is based on the toxic response of that particular species. Substitution to an ADW is authorized in two cases. The first case is when repeating a test due to toxicity in the site dilution water requires an **immediate decision** for ADW use by the permittee and toxicity testing laboratory. The second is when two of the most recent documented incidents of unacceptable site dilution water toxicity require ADW use in future WET testing.

For the second case, written notification from the permittee requesting ADW use **and** written authorization from the permit issuing agency(s) is required **prior to** switching to a long-term use of ADW for the duration of the permit.

Written requests for use of ADW must be mailed with supporting documentation to the following addresses:

Director
Office of Ecosystem Protection (CAA)
U.S. Environmental Protection Agency, Region 1
Five Post Office Square, Suite 100
Mail Code OEP06-5
Boston, MA 02109-3912

and

Manager
Water Technical Unit (SEW)
U.S. Environmental Protection Agency
Five Post Office Square, Suite 100
Mail Code OES04-4
Boston, MA 02109-3912

Note: USEPA Region 1 retains the right to modify any part of the alternate dilution water policy stated in this protocol at any time. Any changes to this policy will be documented in the annual DMR posting.

See the most current annual DMR instructions which can be found on the EPA Region 1 website at http://www.epa.gov/region1/enforcementandassistance/dmr.html for further important details on alternate dilution water substitution requests.

V. TEST CONDITIONS AND TEST ACCEPTABILITY CRITERIA

EPA Region 1 requires tests be performed using four replicates of each control and effluent concentration because the non-parametric statistical tests cannot be used with data from fewer replicates. The following tables summarize the accepted Americamysis and Menidia toxicity test conditions and test acceptability criteria:

EPA NEW ENGLAND EFFLUENT TOXICITY TEST CONDITIONS FOR THE MYSID, AMERICAMYSIS BAHIA 48 HOUR TEST[1]

1. Test type	48hr Static, non-renewal
2. Salinity	25ppt ± 10 percent for all dilutions by adding dry ocean salts
3. Temperature (^oC)	$20^oC \pm 1^oC$ or $25^oC \pm 1^oC$, temperature must not deviate by more than 3^oC during test
4. Light quality	Ambient laboratory illumination
5. Photoperiod	16 hour light, 8 hour dark
6. Test chamber size	250 ml (minimum)
7. Test solution volume	200 ml/replicate (minimum)
8. Age of test organisms	1-5 days, < 24 hours age range
9. No. Mysids per test chamber	10
10. No. of replicate test chambers per treatment	4
11. Total no. Mysids per test concentration	40
12. Feeding regime	Light feeding using concentrated Artemia naupli while holding prior to initiating the test
13. Aeration [2]	None
14. Dilution water	5-30 ppt, +/- 10%; Natural seawater, or deionized water mixed with artificial sea salts
15. Dilution factor	≥ 0.5
16. Number of dilutions [3]	5 plus a control. An additional dilution at the permitted effluent concentration (%

	effluent) is required if it is not included in the dilution series.
17. Effect measured	Mortality - no movement of body appendages on gentle prodding
18. Test acceptability	90% or greater survival of test organisms in control solution
19. Sampling requirements	For on-site tests, samples are used within 24 hours of the time that they are removed from the sampling device. For off-site tests, samples must be first used within 36 hours of collection.
20. Sample volume required	Minimum 1 liter for effluents and 2 liters for receiving waters

Footnotes:

[1] Adapted from EPA 821-R-02-012.

[2] If dissolved oxygen falls below 4.0 mg/L, aerate at rate of less than 100 bubbles/min. Routine D.O. checks are recommended.

[3] When receiving water is used for dilution, an additional control made up of standard laboratory dilution water (0% effluent) is required.

EPA NEW ENGLAND TOXICITY TEST CONDITIONS FOR THE INLAND SILVERSIDE, MENIDIA BERYLLINA 48 HOUR TEST[1]

1. Test Type	48 hr Static, non-renewal
2. Salinity	25 ppt $\pm$ 10 % by adding dry ocean salts
3. Temperature	$20^{o}C \pm 1^{o}C$ or $25^{o}C \pm 1^{o}C$, temperature must not deviate by more than $3^{o}C$ during test
4. Light Quality	Ambient laboratory illumination
5. Photoperiod	16 hr light, 8 hr dark
6. Size of test vessel	250 mL (minimum)
7. Volume of test solution	200 mL/replicate (minimum)
8. Age of fish	9-14 days; 24 hr age range
9. No. fish per chamber	10 (not to exceed loading limits)
10. No. of replicate test vessels per treatment	4
11. Total no. organisms per concentration	40
12. Feeding regime	Light feeding using concentrated Artemia nauplii while holding prior to initiating the test
13. Aeration[2]	None
14. Dilution water	5-32 ppt, +/- 10% ; Natural seawater, or deionized water mixed with artificial sea salts.
15. Dilution factor	$\geq$ 0.5
16. Number of dilutions[3]	5 plus a control. An additional dilution at the permitted concentration (% effluent) is required if it is not included in the dilution series.
17. Effect measured	Mortality-no movement on gentle prodding.

18. Test acceptability	90% or greater survival of test organisms in control solution.
19. Sampling requirements	For on-site tests, samples must be used within 24 hours of the time they are removed from the sampling device. Off-site test samples must be used within 36 hours of collection.
20. Sample volume required	Minimum 1 liter for effluents and 2 liters for receiving waters.

Footnotes:

[1] Adapted from EPA 821-R-02-012.

[2] If dissolved oxygen falls below 4.0 mg/L, aerate at rate of less than 100 bubbles/min. Routine D.O. checks recommended.

[3] When receiving water is used for dilution, an additional control made up of standard laboratory dilution water (0% effluent) is required.

V.1. Test Acceptability Criteria

If a test does not meet TAC the test must be repeated with fresh samples within 30 days of the initial test completion date.

V.2. Use of Reference Toxicity Testing

Reference toxicity test results and applicable control charts must be included in the toxicity testing report.

In general, if reference toxicity test results fall outside the control limits established by the laboratory for a specific test endpoint, a reason or reasons for this excursion must be evaluated, correction made and reference toxicity tests rerun as necessary as prescribed below.

If a test endpoint value exceeds the control limits at a frequency of more than one out of twenty then causes for the reference toxicity test failure must be examined and if problems are identified corrective action taken. The reference toxicity test must be repeated during the same month in which the exceedance occurred.

If two consecutive reference toxicity tests fall outside control limits, the possible cause(s) for the exceedance must be examined, corrective actions taken and a repeat of the reference toxicity test must take place immediately. Actions taken to resolve the problem must be reported.

V.2.a. Use of Concurrent Reference Toxicity Testing

In the case where concurrent reference toxicity testing is required due to a low frequency of testing with a particular method, if the reference toxicity test results fall slightly outside of laboratory established control limits, but the primary test met the TAC, the results of the primary test will be considered acceptable. However, if the results of the concurrent test fall well outside the established **upper** control limits i.e. ≥3 standard deviations for IC25s and LC50 values and ≥ two concentration intervals for NOECs or NOAECs, and even though the primary test meets TAC, the primary test will be considered unacceptable and must be repeated.

VI. CHEMICAL ANALYSIS

At the beginning of the static acute test, pH, salinity, and temperature must be measured at the beginning and end of each 24 hour period in each dilution and in the controls. The following chemical analyses shall be performed for each sampling event.

Parameter	Effluent	Diluent	Minimum Level for effluent[*1] (mg/L)
pH	x	x	---
Salinity	x	x	ppt(o/oo)
Total Residual Chlorine [*2]	x	x	0.02
Total Solids and Suspended Solids	x	x	---
Ammonia	x	x	0.1
Total Organic Carbon	x	x	0.5
Total Metals			
Cd	x	x	0.0005
Pb	x	x	0.0005
Cu	x	x	0.003
Zn	x	x	0.005
Ni	x	x	0.005

Superscript:

[*1] These are the minimum levels for effluent (fresh water) samples. Tests on diluents (marine waters) shall be conducted using the Part 136 methods that yield the lowest MLs.

[*2] Either of the following methods from the 18th Edition of the APHA Standard Methods for the Examination of Water and Wastewater must be used for these analyses:

-Method 4500-Cl E Low Level Amperometric Titration (the preferred method);
-Method 4500-CL G DPD Photometric Method.

VII. TOXICITY TEST DATA ANALYSIS

LC50 Median Lethal Concentration

An estimate of the concentration of effluent or toxicant that is lethal to 50% of the test organisms during the time prescribed by the test method.

Methods of Estimation:

- Probit Method
- Spearman-Karber
- Trimmed Spearman-Karber
- Graphical

See flow chart in Figure 6 on page 73 of EPA 821-R-02-012 for appropriate method to use on a given data set.

No Observed Acute Effect Level (NOAEL)

See flow chart in Figure 13 on page 87 of EPA 821-R-02-012.

VIII. TOXICITY TEST REPORTING

A report of results must include the following:

- Toxicity Test summary sheet(s) (Attachment F to the DMR Instructions) which includes:
    - Facility name
    - NPDES permit number
    - Outfall number
    - Sample type
    - Sampling method
    - Effluent TRC concentration
    - Dilution water used
    - Receiving water name and sampling location
    - Test type and species
    - Test start date
    - Effluent concentrations tested (%) and permit limit concentration
    - Applicable reference toxicity test date and whether acceptable or not
    - Age, age range and source of test organisms used for testing
    - Results of TAC review for all applicable controls
    - Permit limit and toxicity test results
    - Summary of any test sensitivity and concentration response evaluation that was conducted

Please note: The NPDES Permit Program Instructions for the Discharge Monitoring Report Forms (DMRs) are available on EPA's website at http://www.epa.gov/NE/enforcementandassistance/dmr.html

In addition to the summary sheets the report must include:

- A brief description of sample collection procedures;
- Chain of custody documentation including names of individuals collecting samples, times and dates of sample collection, sample locations, requested analysis and lab receipt with time and date received, lab receipt personnel and condition of samples upon receipt at the lab(s);
- Reference toxicity test control charts;
- All sample chemical/physical data generated, including minimum levels (MLs) and analytical methods used;
- All toxicity test raw data including daily ambient test conditions, toxicity test chemistry, sample dechlorination details as necessary, bench sheets and statistical analysis;
- A discussion of any deviations from test conditions; and
- Any further discussion of reported test results, statistical analysis and concentration-response relationship and test sensitivity review per species per endpoint.

NPDES PART II STANDARD CONDITIONS
(January, 2007)

TABLE OF CONTENTS

PART II. A. GENERAL REQUIREMENTS

1. Duty to Comply

   The permittee must comply with all conditions of this permit. Any permit noncompliance constitutes a violation of the Clean Water Act (CWA) and is grounds for enforcement action; for permit termination, revocation and reissuance, or modification; or for denial of a permit renewal application.

   a. The permittee shall comply with effluent standards or prohibitions established under Section 307(a) of the sludge use or disposal established under Section 405(d) of the CWA within the time provided in the regulations that establish these standards or prohibitions, even if the permit has not yet been modified to incorporate the requirements.

   b. The CWA provides that any person who violates Section 301, 302, 306, 307, 308, 318, or 405 of the CWA or any permit condition or limitation implementing any of such sections in a permit issued under Section 402, or any requirement imposed in a pretreatment program approved under Section 402 (a)(3) or 402 (b)(8) of the CWA is subject to a civil penalty not to exceed $25,000 per day for each violation. Any person who negligently violates such requirements is subject to a fine of not less than $2,500 nor more than $25,000 per day of violation, or by imprisonment for not more than 1 year, or both. Any person who knowingly violates such requirements is subject to a fine of not less than $5,000 nor more than $50,000 per day of violation, or by imprisonment for not more than 3 years, or both.

   c. Any person may be assessed an administrative penalty by the Administrator for violating Section 301, 302, 306, 307, 308, 318, or 405 of the CWA, or any permit condition or limitation implementing any of such sections in a permit issued under Section 402 of the CWA. Administrative penalties for Class I violations are not to exceed $10,000 per violation, with the maximum amount of any Class I penalty assessed not to exceed $25,000. Penalties for Class II violations are not to exceed $10,000 per day for each day during which the violation continues, with the maximum amount of any Class II penalty not to exceed $125,000.

   Note: See 40 CFR §122.41(a)(2) for complete “Duty to Comply” regulations.

2. Permit Actions

   This permit may be modified, revoked and reissued, or terminated for cause. The filing of a request by the permittee for a permit modification, revocation and reissuance, or termination, or notifications of planned changes or anticipated noncompliance does not stay any permit condition.

3. Duty to Provide Information

   The permittee shall furnish to the Regional Administrator, within a reasonable time, any information which the Regional Administrator may request to determine whether cause exists for modifying, revoking and reissuing, or terminating this permit, or to determine compliance with this permit. The permittee shall also furnish to the Regional Administrator, upon request, copies of records required to be kept by this permit.

4. Reopener Clause

The Regional Administrator reserves the right to make appropriate revisions to this permit in order to establish any appropriate effluent limitations, schedules of compliance, or other provisions which may be authorized under the CWA in order to bring all discharges into compliance with the CWA.

For any permit issued to a treatment works treating domestic sewage (including "sludge-only facilities"), the Regional Administrator or Director shall include a reopener clause to incorporate any applicable standard for sewage sludge use or disposal promulgated under Section 405 (d) of the CWA. The Regional Administrator or Director may promptly modify or revoke and reissue any permit containing the reopener clause required by this paragraph if the standard for sewage sludge use or disposal is more stringent than any requirements for sludge use or disposal in the permit, or contains a pollutant or practice not limited in the permit.

Federal regulations pertaining to permit modification, revocation and reissuance, and termination are found at 40 CFR §122.62, 122.63, 122.64, and 124.5.

5. Oil and Hazardous Substance Liability

Nothing in this permit shall be construed to preclude the institution of any legal action or relieve the permittee from responsibilities, liabilities or penalties to which the permittee is or may be subject under Section 311 of the CWA, or Section 106 of the Comprehensive Environmental Response, Compensation and Liability Act of 1980 (CERCLA).

6. Property Rights

The issuance of this permit does not convey any property rights of any sort, nor any exclusive privileges.

7. Confidentiality of Information

a. In accordance with 40 CFR Part 2, any information submitted to EPA pursuant to these regulations may be claimed as confidential by the submitter. Any such claim must be asserted at the time of submission in the manner prescribed on the application form or instructions or, in the case of other submissions, by stamping the words "confidential business information" on each page containing such information. If no claim is made at the time of submission, EPA may make the information available to the public without further notice. If a claim is asserted, the information will be treated in accordance with the procedures in 40 CFR Part 2 (Public Information).

b. Claims of confidentiality for the following information will be denied:

(1) The name and address of any permit applicant or permittee;
(2) Permit applications, permits, and effluent data as defined in 40 CFR §2.302(a)(2).

c. Information required by NPDES application forms provided by the Regional Administrator under 40 CFR §122.21 may not be claimed confidential. This includes information submitted on the forms themselves and any attachments used to supply information required by the forms.

8. Duty to Reapply

If the permittee wishes to continue an activity regulated by this permit after its expiration date, the permittee must apply for and obtain a new permit. The permittee shall submit a new application at least 180 days before the expiration date of the existing permit, unless permission for a later date has been granted by the Regional Administrator. (The Regional Administrator shall not grant permission for applications to be submitted later than the expiration date of the existing permit.)

9. State Authorities

Nothing in Part 122, 123, or 124 precludes more stringent State regulation of any activity covered by these regulations, whether or not under an approved State program.

10. Other Laws

The issuance of a permit does not authorize any injury to persons or property or invasion of other private rights, nor does it relieve the permittee of its obligation to comply with any other applicable Federal, State, or local laws and regulations.

PART II. B. OPERATION AND MAINTENANCE OF POLLUTION CONTROLS

1. Proper Operation and Maintenance

The permittee shall at all times properly operate and maintain all facilities and systems of treatment and control (and related appurtenances) which are installed or used by the permittee to achieve compliance with the conditions of this permit and with the requirements of storm water pollution prevention plans. Proper operation and maintenance also includes adequate laboratory controls and appropriate quality assurance procedures. This provision requires the operation of back-up or auxiliary facilities or similar systems only when the operation is necessary to achieve compliance with the conditions of the permit.

2. Need to Halt or Reduce Not a Defense

It shall not be a defense for a permittee in an enforcement action that it would have been necessary to halt or reduce the permitted activity in order to maintain compliance with the conditions of this permit.

3. Duty to Mitigate

The permittee shall take all reasonable steps to minimize or prevent any discharge or sludge use or disposal in violation of this permit which has a reasonable likelihood of adversely affecting human health or the environment.

4. Bypass

a. Definitions

(1) *Bypass* means the intentional diversion of waste streams from any portion of a treatment facility.

(2) *Severe property damage* means substantial physical damage to property, damage to the treatment facilities which causes them to become inoperable, or substantial and permanent loss of natural resources which can be reasonably expected to occur in the absence of a bypass. Severe property damage does not mean economic loss caused by delays in production.

b. Bypass not exceeding limitations

The permittee may allow any bypass to occur which does not cause effluent limitations to be exceeded, but only if it also is for essential maintenance to assure efficient operation. These bypasses are not subject to the provision of Paragraphs B.4.c. and 4.d. of this section.

c. Notice

(1) Anticipated bypass. If the permittee knows in advance of the need for a bypass, it shall submit prior notice, if possible at least ten days before the date of the bypass.
(2) Unanticipated bypass. The permittee shall submit notice of an unanticipated bypass as required in paragraph D.1.e. of this part (Twenty-four hour reporting).

d. Prohibition of bypass

Bypass is prohibited, and the Regional Administrator may take enforcement action against a permittee for bypass, unless:

(1) Bypass was unavoidable to prevent loss of life, personal injury, or severe property damage;
(2) There were no feasible alternatives to the bypass, such as the use of auxiliary treatment facilities, retention of untreated wastes, or maintenance during normal periods of equipment downtime. This condition is not satisfied if adequate back-up equipment should have been installed in the exercise of reasonable engineering judgment to prevent a bypass which occurred during normal periods of equipment downtime or preventative maintenance; and
(3) i) The permittee submitted notices as required under Paragraph 4.c. of this section.
ii) The Regional Administrator may approve an anticipated bypass, after considering its adverse effects, if the Regional Administrator determines that it will meet the three conditions listed above in paragraph 4.d. of this section.

5. <u>Upset</u>

a. Definition. *Upset* means an exceptional incident in which there is an unintentional and temporary noncompliance with technology-based permit effluent limitations because of factors beyond the reasonable control of the permittee. An upset does not include noncompliance to the extent caused by operational error, improperly designed treatment facilities, inadequate treatment facilities, lack of preventive maintenance, or careless or improper operation.

b. Effect of an upset. An upset constitutes an affirmative defense to an action brought for noncompliance with such technology-based permit effluent limitations if the requirements of paragraph B.5.c. of this section are met. No determination made during

administrative review of claims that noncompliance was caused by upset, and before an action for noncompliance, is final administrative action subject to judicial review.

c. Conditions necessary for a demonstration of upset. A permittee who wishes to establish the affirmative defense of upset shall demonstrate, through properly signed, contemporaneous operating logs, or other relevant evidence that:

(1) An upset occurred and that the permittee can identify the cause(s) of the upset;
(2) The permitted facility was at the time being properly operated;
(3) The permittee submitted notice of the upset as required in paragraphs D.1.a. and 1.e. (Twenty-four hour notice); and
(4) The permittee complied with any remedial measures required under B.3. above.

d. Burden of proof. In any enforcement proceeding the permittee seeking to establish the occurrence of an upset has the burden of proof.

PART II. C. MONITORING REQUIREMENTS

1. Monitoring and Records

a. Samples and measurements taken for the purpose of monitoring shall be representative of the monitored activity.

b. Except for records for monitoring information required by this permit related to the permittee's sewage sludge use and disposal activities, which shall be retained for a period of at least five years (or longer as required by 40 CFR Part 503), the permittee shall retain records of all monitoring information, including all calibration and maintenance records and all original strip chart recordings for continuous monitoring instrumentation, copies of all reports required by this permit, and records of all data used to complete the application for this permit, for a period of at least 3 years from the date of the sample, measurement, report or application except for the information concerning storm water discharges which must be retained for a total of 6 years. This retention period may be extended by request of the Regional Administrator at any time.

c. Records of monitoring information shall include:

(1) The date, exact place, and time of sampling or measurements;
(2) The individual(s) who performed the sampling or measurements;
(3) The date(s) analyses were performed;
(4) The individual(s) who performed the analyses;
(5) The analytical techniques or methods used; and
(6) The results of such analyses.

d. Monitoring results must be conducted according to test procedures approved under 40 CFR Part 136 or, in the case of sludge use or disposal, approved under 40 CFR Part 136 unless otherwise specified in 40 CFR Part 503, unless other test procedures have been specified in the permit.

e. The CWA provides that any person who falsifies, tampers with, or knowingly renders inaccurate any monitoring device or method required to be maintained under this permit shall, upon conviction, be punished by a fine of not more than $10,000, or by

imprisonment for not more than 2 years, or both. If a conviction of a person is for a violation committed after a first conviction of such person under this paragraph, punishment is a fine of not more than $20,000 per day of violation, or by imprisonment of not more than 4 years, or both.

2. Inspection and Entry

The permittee shall allow the Regional Administrator or an authorized representative (including an authorized contractor acting as a representative of the Administrator), upon presentation of credentials and other documents as may be required by law, to:

a. Enter upon the permittee's premises where a regulated facility or activity is located or conducted, or where records must be kept under the conditions of this permit;

b. Have access to and copy, at reasonable times, any records that must be kept under the conditions of this permit;

c. Inspect at reasonable times any facilities, equipment (including monitoring and control equipment), practices, or operations regulated or required under this permit; and

d. Sample or monitor at reasonable times, for the purposes of assuring permit compliance or as otherwise authorized by the CWA, any substances or parameters at any location.

PART II. D. REPORTING REQUIREMENTS

1. Reporting Requirements

a. Planned Changes. The permittee shall give notice to the Regional Administrator as soon as possible of any planned physical alterations or additions to the permitted facility. Notice is only required when:

(1) The alteration or addition to a permitted facility may meet one of the criteria for determining whether a facility is a new source in 40 CFR§122.29(b); or
(2) The alteration or addition could significantly change the nature or increase the quantities of the pollutants discharged. This notification applies to pollutants which are subject neither to the effluent limitations in the permit, nor to the notification requirements at 40 CFR§122.42(a)(1).
(3) The alteration or addition results in a significant change in the permittee's sludge use or disposal practices, and such alteration, addition or change may justify the application of permit conditions different from or absent in the existing permit, including notification of additional use or disposal sites not reported during the permit application process or not reported pursuant to an approved land application plan.

b. Anticipated noncompliance. The permittee shall give advance notice to the Regional Administrator of any planned changes in the permitted facility or activity which may result in noncompliance with permit requirements.

c. Transfers. This permit is not transferable to any person except after notice to the Regional Administrator. The Regional Administrator may require modification or revocation and reissuance of the permit to change the name of the permittee and

incorporate such other requirements as may be necessary under the CWA. (See 40 CFR Part 122.61; in some cases, modification or revocation and reissuance is mandatory.)

d. Monitoring reports. Monitoring results shall be reported at the intervals specified elsewhere in this permit.

(1) Monitoring results must be reported on a Discharge Monitoring Report (DMR) or forms provided or specified by the Director for reporting results of monitoring of sludge use or disposal practices.

(2) If the permittee monitors any pollutant more frequently than required by the permit using test procedures approved under 40 CFR Part 136 or, in the case of sludge use or disposal, approved under 40 CFR Part 136 unless otherwise specified in 40 CFR Part 503, or as specified in the permit, the results of the monitoring shall be included in the calculation and reporting of the data submitted in the DMR or sludge reporting form specified by the Director.

(3) Calculations for all limitations which require averaging or measurements shall utilize an arithmetic mean unless otherwise specified by the Director in the permit.

e. Twenty-four hour reporting.

(1) The permittee shall report any noncompliance which may endanger health or the environment. Any information shall be provided orally within 24 hours from the time the permittee becomes aware of the circumstances.

A written submission shall also be provided within 5 days of the time the permittee becomes aware of the circumstances. The written submission shall contain a description of the noncompliance and its cause; the period of noncompliance, including exact dates and times, and if the noncompliance has not been corrected, the anticipated time it is expected to continue; and steps taken or planned to reduce, eliminate, and prevent reoccurrence of the noncompliance.

(2) The following shall be included as information which must be reported within 24 hours under this paragraph.

(a) Any unanticipated bypass which exceeds any effluent limitation in the permit. (See 40 CFR §122.41(g).)
(b) Any upset which exceeds any effluent limitation in the permit.
(c) Violation of a maximum daily discharge limitation for any of the pollutants listed by the Regional Administrator in the permit to be reported within 24 hours. (See 40 CFR §122.44(g).)

(3) The Regional Administrator may waive the written report on a case-by-case basis for reports under Paragraph D.1.e. if the oral report has been received within 24 hours.

f. Compliance Schedules. Reports of compliance or noncompliance with, any progress reports on, interim and final requirements contained in any compliance schedule of this permit shall be submitted no later than 14 days following each schedule date.

g. Other noncompliance. The permittee shall report all instances of noncompliance not reported under Paragraphs D.1.d., D.1.e., and D.1.f. of this section, at the time monitoring reports are submitted. The reports shall contain the information listed in Paragraph D.1.e. of this section.

h. Other information. Where the permittee becomes aware that it failed to submit any relevant facts in a permit application, or submitted incorrect information in a permit application or in any report to the Regional Administrator, it shall promptly submit such facts or information.

2. Signatory Requirement

a. All applications, reports, or information submitted to the Regional Administrator shall be signed and certified. (See 40 CFR §122.22)

b. The CWA provides that any person who knowingly makes any false statement, representation, or certification in any record or other document submitted or required to be maintained under this permit, including monitoring reports or reports of compliance or noncompliance shall, upon conviction, be punished by a fine of not more than $10,000 per violation, or by imprisonment for not more than 2 years per violation, or by both.

3. Availability of Reports.

Except for data determined to be confidential under Paragraph A.8. above, all reports prepared in accordance with the terms of this permit shall be available for public inspection at the offices of the State water pollution control agency and the Regional Administrator. As required by the CWA, effluent data shall not be considered confidential. Knowingly making any false statements on any such report may result in the imposition of criminal penalties as provided for in Section 309 of the CWA.

PART II. E. DEFINITIONS AND ABBREVIATIONS

1. Definitions for Individual NPDES Permits including Storm Water Requirements

Administrator means the Administrator of the United States Environmental Protection Agency, or an authorized representative.

Applicable standards and limitations means all, State, interstate, and Federal standards and limitations to which a “discharge”, a “sewage sludge use or disposal practice”, or a related activity is subject to, including “effluent limitations”, water quality standards, standards of performance, toxic effluent standards or prohibitions, “best management practices”, pretreatment standards, and “standards for sewage sludge use and disposal” under Sections 301, 302, 303, 304, 306, 307, 308, 403, and 405 of the CWA.

Application means the EPA standard national forms for applying for a permit, including any additions, revisions, or modifications to the forms; or forms approved by EPA for use in "approved States", including any approved modifications or revisions.

Average means the arithmetic mean of values taken at the frequency required for each parameter over the specified period. For total and/or fecal coliforms and Escherichia coli, the average shall be the geometric mean.

Average monthly discharge limitation means the highest allowable average of "daily discharges" over a calendar month calculated as the sum of all "daily discharges" measured during a calendar month divided by the number of "daily discharges" measured during that month.

Average weekly discharge limitation means the highest allowable average of "daily discharges" measured during the calendar week divided by the number of "daily discharges" measured during the week.

Best Management Practices (BMPs) means schedules of activities, prohibitions of practices, maintenance procedures, and other management practices to prevent or reduce the pollution of "waters of the United States." BMPs also include treatment requirements, operating procedures, and practices to control plant site runoff, spillage or leaks, sludge or waste disposal, or drainage from raw material storage.

Best Professional Judgment (BPJ) means a case-by-case determination of Best Practicable Treatment (BPT), Best Available Treatment (BAT), or other appropriate technology-based standard based on an evaluation of the available technology to achieve a particular pollutant reduction and other factors set forth in 40 CFR §125.3 (d).

Coal Pile Runoff means the rainfall runoff from or through any coal storage pile.

Composite Sample means a sample consisting of a minimum of eight grab samples of equal volume collected at equal intervals during a 24-hour period (or lesser period as specified in the section on Monitoring and Reporting) and combined proportional to flow, or a sample consisting of the same number of grab samples, or greater, collected proportionally to flow over that same time period.

Construction Activities - The following definitions apply to construction activities:

(a) Commencement of Construction is the initial disturbance of soils associated with clearing, grading, or excavating activities or other construction activities.

(b) Dedicated portable asphalt plant is a portable asphalt plant located on or contiguous to a construction site and that provides asphalt only to the construction site that the plant is located on or adjacent to. The term dedicated portable asphalt plant does not include facilities that are subject to the asphalt emulsion effluent limitation guideline at 40 CFR Part 443.

(c) Dedicated portable concrete plant is a portable concrete plant located on or contiguous to a construction site and that provides concrete only to the construction site that the plant is located on or adjacent to.

(d) Final Stabilization means that all soil disturbing activities at the site have been complete, and that a uniform perennial vegetative cover with a density of 70% of the cover for unpaved areas and areas not covered by permanent structures has been established or equivalent permanent stabilization measures (such as the use of riprap, gabions, or geotextiles) have been employed.

(e) Runoff coefficient means the fraction of total rainfall that will appear at the conveyance as runoff.

Contiguous zone means the entire zone established by the United States under Article 24 of the Convention on the Territorial Sea and the Contiguous Zone.

Continuous discharge means a "discharge" which occurs without interruption throughout the operating hours of the facility except for infrequent shutdowns for maintenance, process changes, or similar activities.

CWA means the Clean Water Act (formerly referred to as the Federal Water Pollution Control Act or Federal Water Pollution Control Act Amendments of 1972) Pub. L. 92-500, as amended by Pub. L. 95-217, Pub. L. 95-576, Pub. L. 96-483, and Pub. L. 97-117; 33 USC §§1251 et seq.

Daily Discharge means the discharge of a pollutant measured during the calendar day or any other 24-hour period that reasonably represents the calendar day for purposes of sampling. For pollutants with limitations expressed in units of mass, the "daily discharge" is calculated as the total mass of the pollutant discharged over the day. For pollutants with limitations expressed in other units of measurements, the "daily discharge" is calculated as the average measurement of the pollutant over the day.

Director normally means the person authorized to sign NPDES permits by EPA or the State or an authorized representative. Conversely, it also could mean the Regional Administrator or the State Director as the context requires.

Discharge Monitoring Report Form (DMR) means the EPA standard national form, including any subsequent additions, revisions, or modifications for the reporting of self-monitoring results by permittees. DMRs must be used by "approved States" as well as by EPA. EPA will supply DMRs to any approved State upon request. The EPA national forms may be modified to substitute the State Agency name, address, logo, and other similar information, as appropriate, in place of EPA's.

Discharge of a pollutant means:

(a) Any addition of any "pollutant" or combination of pollutants to "waters of the United States" from any "point source", or

(b) Any addition of any pollutant or combination of pollutants to the waters of the "contiguous zone" or the ocean from any point source other than a vessel or other floating craft which is being used as a means of transportation (See "Point Source" definition).

This definition includes additions of pollutants into waters of the United States from: surface runoff which is collected or channeled by man; discharges through pipes, sewers, or other conveyances owned by a State, municipality, or other person which do not lead

to a treatment works; and discharges through pipes, sewers, or other conveyances leading into privately owned treatment works.

This term does not include an addition of pollutants by any "indirect discharger."

Effluent limitation means any restriction imposed by the Regional Administrator on quantities, discharge rates, and concentrations of "pollutants" which are "discharged" from "point sources" into "waters of the United States", the waters of the "contiguous zone", or the ocean.

Effluent limitation guidelines means a regulation published by the Administrator under Section 304(b) of CWA to adopt or revise "effluent limitations".

EPA means the United States "Environmental Protection Agency".

Flow-weighted composite sample means a composite sample consisting of a mixture of aliquots where the volume of each aliquot is proportional to the flow rate of the discharge.

Grab Sample – An individual sample collected in a period of less than 15 minutes.

Hazardous Substance means any substance designated under 40 CFR Part 116 pursuant to Section 311 of the CWA.

Indirect Discharger means a non-domestic discharger introducing pollutants to a publicly owned treatment works.

Interference means a discharge which, alone or in conjunction with a discharge or discharges from other sources, both:

(a) Inhibits or disrupts the POTW, its treatment processes or operations, or its sludge processes, use or disposal; and

(b) Therefore is a cause of a violation of any requirement of the POTW's NPDES permit (including an increase in the magnitude or duration of a violation) or of the prevention of sewage sludge use or disposal in compliance with the following statutory provisions and regulations or permits issued thereunder (or more stringent State or local regulations): Section 405 of the Clean Water Act (CWA), the Solid Waste Disposal Act (SWDA) (including Title II, more commonly referred to as the Resources Conservation and Recovery Act (RCRA), and including State regulations contained in any State sludge management plan prepared pursuant to Subtitle D of the SDWA), the Clean Air Act, the Toxic Substances Control Act, and the Marine Protection Research and Sanctuaries Act.

Landfill means an area of land or an excavation in which wastes are placed for permanent disposal, and which is not a land application unit, surface impoundment, injection well, or waste pile.

Land application unit means an area where wastes are applied onto or incorporated into the soil surface (excluding manure spreading operations) for treatment or disposal.

Large and Medium municipal separate storm sewer system means all municipal separate storm sewers that are either: (i) located in an incorporated place (city) with a population of 100,000 or more as determined by the latest Decennial Census by the Bureau of Census (these cities are listed in Appendices F and 40 CFR Part 122); or (ii) located in the counties with unincorporated urbanized

populations of 100,000 or more, except municipal separate storm sewers that are located in the incorporated places, townships, or towns within such counties (these counties are listed in Appendices H and I of 40 CFR 122); or (iii) owned or operated by a municipality other than those described in Paragraph (i) or (ii) and that are designated by the Regional Administrator as part of the large or medium municipal separate storm sewer system.

Maximum daily discharge limitation means the highest allowable "daily discharge" concentration that occurs only during a normal day (24-hour duration).

Maximum daily discharge limitation (as defined for the Steam Electric Power Plants only) when applied to Total Residual Chlorine (TRC) or Total Residual Oxidant (TRO) is defined as "maximum concentration" or "Instantaneous Maximum Concentration" during the two hours of a chlorination cycle (or fraction thereof) prescribed in the Steam Electric Guidelines, 40 CFR Part 423. These three synonymous terms all mean "a value that shall not be exceeded" during the two-hour chlorination cycle. This interpretation differs from the specified NPDES Permit requirement, 40 CFR § 122.2, where the two terms of "Maximum Daily Discharge" and "Average Daily Discharge" concentrations are specifically limited to the daily (24-hour duration) values.

Municipality means a city, town, borough, county, parish, district, association, or other public body created by or under State law and having jurisdiction over disposal of sewage, industrial wastes, or other wastes, or an Indian tribe or an authorized Indian tribe organization, or a designated and approved management agency under Section 208 of the CWA.

National Pollutant Discharge Elimination System means the national program for issuing, modifying, revoking and reissuing, terminating, monitoring and enforcing permits, and imposing and enforcing pretreatment requirements, under Sections 307, 402, 318, and 405 of the CWA. The term includes an "approved program".

New Discharger means any building, structure, facility, or installation:

(a) From which there is or may be a "discharge of pollutants";

(b) That did not commence the "discharge of pollutants" at a particular "site" prior to August 13, 1979;

(c) Which is not a "new source"; and

(d) Which has never received a finally effective NPDES permit for discharges at that "site".

This definition includes an "indirect discharger" which commences discharging into "waters of the United States" after August 13, 1979. It also includes any existing mobile point source (other than an offshore or coastal oil and gas exploratory drilling rig or a coastal oil and gas exploratory drilling rig or a coastal oil and gas developmental drilling rig) such as a seafood processing rig, seafood processing vessel, or aggregate plant, that begins discharging at a "site" for which it does not have a permit; and any offshore rig or coastal mobile oil and gas exploratory drilling rig or coastal mobile oil and gas developmental drilling rig that commences the discharge of pollutants after August 13, 1979, at a "site" under EPA's permitting jurisdiction for which it is not covered by an individual or general permit and which is located in an area determined by the Regional Administrator in the issuance of a final permit to be in an area of biological concern. In determining whether an area is an area of biological concern, the Regional Administrator shall consider the factors specified in 40 CFR §§125.122 (a) (1) through (10).

An offshore or coastal mobile exploratory drilling rig or coastal mobile developmental drilling rig will be considered a "new discharger" only for the duration of its discharge in an area of biological concern.

New source means any building, structure, facility, or installation from which there is or may be a "discharge of pollutants", the construction of which commenced:

(a) After promulgation of standards of performance under Section 306 of CWA which are applicable to such source, or

(b) After proposal of standards of performance in accordance with Section 306 of CWA which are applicable to such source, but only if the standards are promulgated in accordance with Section 306 within 120 days of their proposal.

NPDES means "National Pollutant Discharge Elimination System".

Owner or operator means the owner or operator of any "facility or activity" subject to regulation under the NPDES programs.

Pass through means a Discharge which exits the POTW into waters of the United States in quantities or concentrations which, alone or in conjunction with a discharge or discharges from other sources, is a cause of a violation of any requirement of the POTW's NPDES permit (including an increase in the magnitude or duration of a violation).

Permit means an authorization, license, or equivalent control document issued by EPA or an "approved" State.

Person means an individual, association, partnership, corporation, municipality, State or Federal agency, or an agent or employee thereof.

Point Source means any discernible, confined, and discrete conveyance, including but not limited to any pipe ditch, channel, tunnel, conduit, well, discrete fissure, container, rolling stock, concentrated animal feeding operation, landfill leachate collection system, vessel, or other floating craft, from which pollutants are or may be discharged. This term does not include return flows from irrigated agriculture or agricultural storm water runoff (see 40 CFR §122.2).

Pollutant means dredged spoil, solid waste, incinerator residue, filter backwash, sewage, garbage, sewage sludge, munitions, chemical wastes, biological materials, radioactive materials (except those regulated under the Atomic Energy Act of 1954, as amended (42 U.S.C. §§2011 et seq.)), heat, wrecked or discarded equipment, rock, sand, cellar dirt and industrial, municipal, and agricultural waste discharged into water. It does not mean:

(a) Sewage from vessels; or

(b) Water, gas, or other material which is injected into a well to facilitate production of oil or gas, or water derived in association with oil and gas production and disposed of in a well, if the well is used either to facilitate production or for disposal purposes is approved by the authority of the State in which the well is located, and if the State determines that the injection or disposal will not result in the degradation of ground or surface water resources.

Primary industry category means any industry category listed in the NRDC settlement agreement (Natural Resources Defense Council et al. v. Train, 8 E.R.C. 2120 (D.D.C. 1976), modified 12 E.R.C. 1833 (D. D.C. 1979)); also listed in Appendix A of 40 CFR Part 122.

Privately owned treatment works means any device or system which is (a) used to treat wastes from any facility whose operation is not the operator of the treatment works or (b) not a "POTW".

Process wastewater means any water which, during manufacturing or processing, comes into direct contact with or results from the production or use of any raw material, intermediate product, finished product, byproduct, or waste product.

Publicly Owned Treatment Works (POTW) means any facility or system used in the treatment (including recycling and reclamation) of municipal sewage or industrial wastes of a liquid nature which is owned by a "State" or "municipality".

This definition includes sewers, pipes, or other conveyances only if they convey wastewater to a POTW providing treatment.

Regional Administrator means the Regional Administrator, EPA, Region I, Boston, Massachusetts.

Secondary Industry Category means any industry which is not a "primary industry category".

Section 313 water priority chemical means a chemical or chemical category which:

(1) is listed at 40 CFR §372.65 pursuant to Section 313 of the Emergency Planning and Community Right-To-Know Act (EPCRA) (also known as Title III of the Superfund Amendments and Reauthorization Act (SARA) of 1986);

(2) is present at or above threshold levels at a facility subject to EPCRA Section 313 reporting requirements; and

(3) satisfies at least one of the following criteria:

(i) are listed in Appendix D of 40 CFR Part 122 on either Table II (organic priority pollutants), Table III (certain metals, cyanides, and phenols), or Table V (certain toxic pollutants and hazardous substances);
(ii) are listed as a hazardous substance pursuant to Section 311(b)(2)(A) of the CWA at 40 CFR §116.4; or
(iii) are pollutants for which EPA has published acute or chronic water quality criteria.

Septage means the liquid and solid material pumped from a septic tank, cesspool, or similar domestic sewage treatment system, or a holding tank when the system is cleaned or maintained.

Sewage Sludge means any solid, semisolid, or liquid residue removed during the treatment of municipal wastewater or domestic sewage. Sewage sludge includes, but is not limited to, solids removed during primary, secondary, or advanced wastewater treatment, scum, septage, portable toilet pumpings, Type III Marine Sanitation Device pumpings (33 CFR Part 159), and sewage sludge products. Sewage sludge does not include grit or screenings, or ash generated during the incineration of sewage sludge.

Sewage sludge use or disposal practice means the collection, storage, treatment, transportation, processing, monitoring, use, or disposal of sewage sludge.

Significant materials includes, but is not limited to: raw materials, fuels, materials such as solvents, detergents, and plastic pellets, raw materials used in food processing or production, hazardous substance designated under section 101(14) of CERCLA, any chemical the facility is required to report pursuant to EPCRA Section 313, fertilizers, pesticides, and waste products such as ashes, slag, and sludge that have the potential to be released with storm water discharges.

Significant spills includes, but is not limited to, releases of oil or hazardous substances in excess of reportable quantities under Section 311 of the CWA (see 40 CFR §110.10 and §117.21) or Section 102 of CERCLA (see 40 CFR § 302.4).

Sludge-only facility means any "treatment works treating domestic sewage" whose methods of sewage sludge use or disposal are subject to regulations promulgated pursuant to Section 405(d) of the CWA, and is required to obtain a permit under 40 CFR §122.1(b)(3).

State means any of the 50 States, the District of Columbia, Guam, the Commonwealth of Puerto Rico, the Virgin Islands, American Samoa, the Trust Territory of the Pacific Islands.

Storm Water means storm water runoff, snow melt runoff, and surface runoff and drainage.

Storm water discharge associated with industrial activity means the discharge from any conveyance which is used for collecting and conveying storm water and which is directly related to manufacturing, processing, or raw materials storage areas at an industrial plant. (See 40 CFR §122.26 (b)(14) for specifics of this definition.

Time-weighted composite means a composite sample consisting of a mixture of equal volume aliquots collected at a constant time interval.

Toxic pollutants means any pollutant listed as toxic under Section 307 (a)(1) or, in the case of "sludge use or disposal practices" any pollutant identified in regulations implementing Section 405(d) of the CWA.

Treatment works treating domestic sewage means a POTW or any other sewage sludge or wastewater treatment devices or systems, regardless of ownership (including federal facilities), used in the storage, treatment, recycling, and reclamation of municipal or domestic sewage, including land dedicated for the disposal of sewage sludge. This definition does not include septic tanks or similar devices.

For purposes of this definition, "domestic sewage" includes waste and wastewater from humans or household operations that are discharged to or otherwise enter a treatment works. In States where there is no approved State sludge management program under Section 405(f) of the CWA, the Regional Administrator may designate any person subject to the standards for sewage sludge use and disposal in 40 CFR Part 503 as a "treatment works treating domestic sewage", where he or she finds that there is a potential for adverse effects on public health and the environment from poor sludge quality or poor sludge handling, use or disposal practices, or where he or she finds that such designation is necessary to ensure that such person is in compliance with 40 CFR Part 503.

Waste Pile means any non-containerized accumulation of solid, non-flowing waste that is used for treatment or storage.

Waters of the United States means:

(a) All waters which are currently used, were used in the past, or may be susceptible to use in interstate or foreign commerce, including all waters which are subject to the ebb and flow of tide;

(b) All interstate waters, including interstate "wetlands";

(c) All other waters such as intrastate lakes, rivers, streams (including intermittent streams), mudflats, sandflats, "wetlands", sloughs, prairie potholes, wet meadows, playa lakes, or natural ponds the use, degradation, or destruction of which would affect or could affect interstate or foreign commerce including any such waters:

(1) Which are or could be used by interstate or foreign travelers for recreational or other purpose;

(2) From which fish or shellfish are or could be taken and sold in interstate or foreign commerce; or

(3) Which are used or could be used for industrial purposes by industries in interstate commerce;

(d) All impoundments of waters otherwise defined as waters of the United States under this definition;

(e) Tributaries of waters identified in Paragraphs (a) through (d) of this definition;

(f) The territorial sea; and

(g) "Wetlands" adjacent to waters (other than waters that are themselves wetlands) identified in Paragraphs (a) through (f) of this definition.

Waste treatment systems, including treatment ponds or lagoons designed to meet the requirements of the CWA (other than cooling ponds as defined in 40 CFR §423.11(m) which also meet the criteria of this definition) are not waters of the United States.

Wetlands means those areas that are inundated or saturated by surface or ground water at a frequency and duration to support, and that under normal circumstances do support, a prevalence of vegetation typically adapted for life in saturated soil conditions. Wetlands generally include swamps, marshes, bogs, and similar areas.

Whole Effluent Toxicity (WET) means the aggregate toxic effect of an effluent measured directly by a toxicity test. (See Abbreviations Section, following, for additional information.)

2. Definitions for NPDES Permit Sludge Use and Disposal Requirements.

Active sewage sludge unit is a sewage sludge unit that has not closed.

Aerobic Digestion is the biochemical decomposition of organic matter in sewage sludge into carbon dioxide and water by microorganisms in the presence of air.

Agricultural Land is land on which a food crop, a feed crop, or a fiber crop is grown. This includes range land and land used as pasture.

Agronomic rate is the whole sludge application rate (dry weight basis) designed:

(1) To provide the amount of nitrogen needed by the food crop, feed crop, fiber crop, cover crop, or vegetation grown on the land; and

(2) To minimize the amount of nitrogen in the sewage sludge that passes below the root zone of the crop or vegetation grown on the land to the ground water.

Air pollution control device is one or more processes used to treat the exit gas from a sewage sludge incinerator stack.

Anaerobic digestion is the biochemical decomposition of organic matter in sewage sludge into methane gas and carbon dioxide by microorganisms in the absence of air.

Annual pollutant loading rate is the maximum amount of a pollutant that can be applied to a unit area of land during a 365 day period.

Annual whole sludge application rate is the maximum amount of sewage sludge (dry weight basis) that can be applied to a unit area of land during a 365 day period.

Apply sewage sludge or sewage sludge applied to the land means land application of sewage sludge.

Aquifer is a geologic formation, group of geologic formations, or a portion of a geologic formation capable of yielding ground water to wells or springs.

Auxiliary fuel is fuel used to augment the fuel value of sewage sludge. This includes, but is not limited to, natural gas, fuel oil, coal, gas generated during anaerobic digestion of sewage sludge, and municipal solid waste (not to exceed 30 percent of the dry weight of the sewage sludge and auxiliary fuel together). Hazardous wastes are not auxiliary fuel.

Base flood is a flood that has a one percent chance of occurring in any given year (i.e. a flood with a magnitude equaled once in 100 years).

Bulk sewage sludge is sewage sludge that is not sold or given away in a bag or other container for application to the land.

Contaminate an aquifer means to introduce a substance that causes the maximum contaminant level for nitrate in 40 CFR §141.11 to be exceeded in ground water or that causes the existing concentration of nitrate in the ground water to increase when the existing concentration of nitrate in the ground water exceeds the maximum contaminant level for nitrate in 40 CFR §141.11.

Class I sludge management facility is any publicly owned treatment works (POTW), as defined in 40 CFR §501.2, required to have an approved pretreatment program under 40 CFR §403.8 (a) (including any POTW located in a state that has elected to assume local program responsibilities pursuant to 40 CFR §403.10 (e) and any treatment works treating domestic sewage, as defined in 40 CFR § 122.2,

classified as a Class I sludge management facility by the EPA Regional Administrator, or, in the case of approved state programs, the Regional Administrator in conjunction with the State Director, because of the potential for sewage sludge use or disposal practice to affect public health and the environment adversely.

Control efficiency is the mass of a pollutant in the sewage sludge fed to an incinerator minus the mass of that pollutant in the exit gas from the incinerator stack divided by the mass of the pollutant in the sewage sludge fed to the incinerator.

Cover is soil or other material used to cover sewage sludge placed on an active sewage sludge unit.

Cover crop is a small grain crop, such as oats, wheat, or barley, not grown for harvest.

Cumulative pollutant loading rate is the maximum amount of inorganic pollutant that can be applied to an area of land.

Density of microorganisms is the number of microorganisms per unit mass of total solids (dry weight) in the sewage sludge.

Dispersion factor is the ratio of the increase in the ground level ambient air concentration for a pollutant at or beyond the property line of the site where the sewage sludge incinerator is located to the mass emission rate for the pollutant from the incinerator stack.

Displacement is the relative movement of any two sides of a fault measured in any direction.

Domestic septage is either liquid or solid material removed from a septic tank, cesspool, portable toilet, Type III marine sanitation device, or similar treatment works that receives only domestic sewage. Domestic septage does not include liquid or solid material removed from a septic tank, cesspool, or similar treatment works that receives either commercial wastewater or industrial wastewater and does not include grease removed from a grease trap at a restaurant.

Domestic sewage is waste and wastewater from humans or household operations that is discharged to or otherwise enters a treatment works.

Dry weight basis means calculated on the basis of having been dried at 105 degrees Celsius (°C) until reaching a constant mass (i.e. essentially 100 percent solids content).

Fault is a fracture or zone of fractures in any materials along which strata on one side are displaced with respect to the strata on the other side.

Feed crops are crops produced primarily for consumption by animals.

Fiber crops are crops such as flax and cotton.

Final cover is the last layer of soil or other material placed on a sewage sludge unit at closure.

Fluidized bed incinerator is an enclosed device in which organic matter and inorganic matter in sewage sludge are combusted in a bed of particles suspended in the combustion chamber gas.

Food crops are crops consumed by humans. These include, but are not limited to, fruits, vegetables, and tobacco.

Forest is a tract of land thick with trees and underbrush.

Ground water is water below the land surface in the saturated zone.

Holocene time is the most recent epoch of the Quaternary period, extending from the end of the Pleistocene epoch to the present.

Hourly average is the arithmetic mean of all the measurements taken during an hour. At least two measurements must be taken during the hour.

Incineration is the combustion of organic matter and inorganic matter in sewage sludge by high temperatures in an enclosed device.

Industrial wastewater is wastewater generated in a commercial or industrial process.

Land application is the spraying or spreading of sewage sludge onto the land surface; the injection of sewage sludge below the land surface; or the incorporation of sewage sludge into the soil so that the sewage sludge can either condition the soil or fertilize crops or vegetation grown in the soil.

Land with a high potential for public exposure is land that the public uses frequently. This includes, but is not limited to, a public contact site and reclamation site located in a populated area (e.g., a construction site located in a city).

Land with low potential for public exposure is land that the public uses infrequently. This includes, but is not limited to, agricultural land, forest and a reclamation site located in an unpopulated area (e.g., a strip mine located in a rural area).

Leachate collection system is a system or device installed immediately above a liner that is designed, constructed, maintained, and operated to collect and remove leachate from a sewage sludge unit.

Liner is soil or synthetic material that has a hydraulic conductivity of 1×10^{-7} centimeters per second or less.

Lower explosive limit for methane gas is the lowest percentage of methane gas in air, by volume, that propagates a flame at 25 degrees Celsius and atmospheric pressure.

Monthly average (Incineration) is the arithmetic mean of the hourly averages for the hours a sewage sludge incinerator operates during the month.

Monthly average (Land Application) is the arithmetic mean of all measurements taken during the month.

Municipality means a city, town, borough, county, parish, district, association, or other public body (including an intermunicipal agency of two or more of the foregoing entities) created by or under State law; an Indian tribe or an authorized Indian tribal organization having jurisdiction over sewage sludge management; or a designated and approved management agency under section 208 of the CWA, as amended. The definition includes a special district created under state law, such as a water district, sewer district, sanitary district, utility district, drainage district, or similar entity, or an integrated waste management facility as defined in section 201 (e) of the CWA, as amended, that has as one of its principal responsibilities the treatment, transport, use or disposal of sewage sludge.

Other container is either an open or closed receptacle. This includes, but is not limited to, a bucket, a box, a carton, and a vehicle or trailer with a load capacity of one metric ton or less.

Pasture is land on which animals feed directly on feed crops such as legumes, grasses, grain stubble, or stover.

Pathogenic organisms are disease-causing organisms. These include, but are not limited to, certain bacteria, protozoa, viruses, and viable helminth ova.

Permitting authority is either EPA or a State with an EPA-approved sludge management program.

Person is an individual, association, partnership, corporation, municipality, State or Federal Agency, or an agent or employee thereof.

Person who prepares sewage sludge is either the person who generates sewage sludge during the treatment of domestic sewage in a treatment works or the person who derives a material from sewage sludge.

pH means the logarithm of the reciprocal of the hydrogen ion concentration; a measure of the acidity or alkalinity of a liquid or solid material.

Place sewage sludge or sewage sludge placed means disposal of sewage sludge on a surface disposal site.

Pollutant (as defined in sludge disposal requirements) is an organic substance, an inorganic substance, a combination or organic and inorganic substances, or pathogenic organism that, after discharge and upon exposure, ingestion, inhalation, or assimilation into an organism either directly from the environment or indirectly by ingestion through the food chain, could on the basis on information available to the Administrator of EPA, cause death, disease, behavioral abnormalities, cancer, genetic mutations, physiological malfunctions (including malfunction in reproduction) or physical deformations in either organisms or offspring of the organisms.

Pollutant limit (for sludge disposal requirements) is a numerical value that describes the amount of a pollutant allowed per unit amount of sewage sludge (e.g., milligrams per kilogram of total solids); the amount of pollutant that can be applied to a unit of land (e.g., kilograms per hectare); or the volume of the material that can be applied to the land (e.g., gallons per acre).

Public contact site is a land with a high potential for contact by the public. This includes, but is not limited to, public parks, ball fields, cemeteries, plant nurseries, turf farms, and golf courses.

Qualified ground water scientist is an individual with a baccalaureate or post-graduate degree in the natural sciences or engineering who has sufficient training and experience in ground water hydrology and related fields, as may be demonstrated by State registration, professional certification, or completion of accredited university programs, to make sound professional judgments regarding ground water monitoring, pollutant fate and transport, and corrective action.

Range land is open land with indigenous vegetation.

Reclamation site is drastically disturbed land that is reclaimed using sewage sludge. This includes, but is not limited to, strip mines and construction sites.

Risk specific concentration is the allowable increase in the average daily ground level ambient air concentration for a pollutant from the incineration of sewage sludge at or beyond the property line of a site where the sewage sludge incinerator is located.

Runoff is rainwater, leachate, or other liquid that drains overland on any part of a land surface and runs off the land surface.

Seismic impact zone is an area that has 10 percent or greater probability that the horizontal ground level acceleration to the rock in the area exceeds 0.10 gravity once in 250 years.

Sewage sludge is a solid, semi-solid, or liquid residue generated during the treatment of domestic sewage in a treatment works. Sewage sludge includes, but is not limited to:, domestic septage; scum or solids removed in primary, secondary, or advanced wastewater treatment processes; and a material derived from sewage sludge. Sewage sludge does not include ash generated during the firing of sewage sludge in a sewage sludge incinerator or grit and screening generated during preliminary treatment of domestic sewage in treatment works.

Sewage sludge feed rate is either the average daily amount of sewage sludge fired in all sewage sludge incinerators within the property line of the site where the sewage sludge incinerators are located for the number of days in a 365 day period that each sewage sludge incinerator operates, or the average daily design capacity for all sewage sludge incinerators within the property line of the site where the sewage sludge incinerators are located.

Sewage sludge incinerator is an enclosed device in which only sewage sludge and auxiliary fuel are fired.

Sewage sludge unit is land on which only sewage sludge is placed for final disposal. This does not include land on which sewage sludge is either stored or treated. Land does not include waters of the United States, as defined in 40 CFR §122.2.

Sewage sludge unit boundary is the outermost perimeter of an active sewage sludge unit.

Specific oxygen uptake rate (SOUR) is the mass of oxygen consumed per unit time per unit mass of total solids (dry weight basis) in sewage sludge.

Stack height is the difference between the elevation of the top of a sewage sludge incinerator stack and the elevation of the ground at the base of the stack when the difference is equal to or less than 65 meters. When the difference is greater than 65 meters, stack height is the creditable stack height determined in accordance with 40 CFR §51.100 (ii).

State is one of the United States of America, the District of Columbia, the Commonwealth of Puerto Rico, the Virgin Islands, Guam, American Samoa, the Trust Territory of the Pacific Islands, the Commonwealth of the Northern Mariana Islands, and an Indian tribe eligible for treatment as a State pursuant to regulations promulgated under the authority of section 518(e) of the CWA.

Store or storage of sewage sludge is the placement of sewage sludge on land on which the sewage sludge remains for two years or less. This does not include the placement of sewage sludge on land for treatment.

Surface disposal site is an area of land that contains one or more active sewage sludge units.

Total hydrocarbons means the organic compounds in the exit gas from a sewage sludge incinerator stack measured using a flame ionization detection instrument referenced to propane.

Total solids are the materials in sewage sludge that remain as residue when the sewage sludge is dried at 103 to 105 degrees Celsius.

Treat or treatment of sewage sludge is the preparation of sewage sludge for final use or disposal. This includes, but is not limited to, thickening, stabilization, and dewatering of sewage sludge. This does not include storage of sewage sludge.

Treatment works is either a federally owned, publicly owned, or privately owned device or system used to treat (including recycle and reclaim) either domestic sewage or a combination of domestic sewage and industrial waste of a liquid nature.

Unstable area is land subject to natural or human-induced forces that may damage the structural components of an active sewage sludge unit. This includes, but is not limited to, land on which the soils are subject to mass movement.

Unstabilized solids are organic materials in sewage sludge that have not been treated in either an aerobic or anaerobic treatment process.

Vector attraction is the characteristic of sewage sludge that attracts rodents, flies, mosquitoes, or other organisms capable of transporting infectious agents.

Volatile solids is the amount of the total solids in sewage sludge lost when the sewage sludge is combusted at 550 degrees Celsius in the presence of excess air.

Wet electrostatic precipitator is an air pollution control device that uses both electrical forces and water to remove pollutants in the exit gas from a sewage sludge incinerator stack.

Wet scrubber is an air pollution control device that uses water to remove pollutants in the exit gas from a sewage sludge incinerator stack.

3. Commonly Used Abbreviations

BOD	Five-day biochemical oxygen demand unless otherwise specified
CBOD	Carbonaceous BOD
CFS	Cubic feet per second
COD	Chemical oxygen demand
Chlorine	
Cl_2	Total residual chlorine
TRC	Total residual chlorine which is a combination of free available chlorine (FAC, see below) and combined chlorine (chloramines, etc.)

TRO	Total residual chlorine in marine waters where halogen compounds are present
FAC	Free available chlorine (aqueous molecular chlorine, hypochlorous acid, and hypochlorite ion)
Coliform	
Coliform, Fecal	Total fecal coliform bacteria
Coliform, Total	Total coliform bacteria
Cont. (Continuous)	Continuous recording of the parameter being monitored, i.e. flow, temperature, pH, etc.
Cu. M/day or M^3/day	Cubic meters per day
DO	Dissolved oxygen
kg/day	Kilograms per day
lbs/day	Pounds per day
mg/l	Milligram(s) per liter
ml/l	Milliliters per liter
MGD	Million gallons per day
Nitrogen	
Total N	Total nitrogen
NH_3-N	Ammonia nitrogen as nitrogen
NO_3-N	Nitrate as nitrogen
NO_2-N	Nitrite as nitrogen
NO_3-NO_2	Combined nitrate and nitrite nitrogen as nitrogen
TKN	Total Kjeldahl nitrogen as nitrogen
Oil & Grease	Freon extractable material
PCB	Polychlorinated biphenyl
pH	A measure of the hydrogen ion concentration. A measure of the acidity or alkalinity of a liquid or material
Surfactant	Surface-active agent

Temp. °C	Temperature in degrees Centigrade
Temp. °F	Temperature in degrees Fahrenheit
TOC	Total organic carbon
Total P	Total phosphorus
TSS or NFR	Total suspended solids or total nonfilterable residue
Turb. or Turbidity	Turbidity measured by the Nephelometric Method (NTU)
ug/l	Microgram(s) per liter
WET	"Whole effluent toxicity" is the total effect of an effluent measured directly with a toxicity test.
C-NOEC	"Chronic (Long-term Exposure Test) – No Observed Effect Concentration". The highest tested concentration of an effluent or a toxicant at which no adverse effects are observed on the aquatic test organisms at a specified time of observation.
A-NOEC	"Acute (Short-term Exposure Test) – No Observed Effect Concentration" (see C-NOEC definition).
LC_{50}	LC_{50} is the concentration of a sample that causes mortality of 50% of the test population at a specific time of observation. The LC_{50} = 100% is defined as a sample of undiluted effluent.
ZID	Zone of Initial Dilution means the region of initial mixing surrounding or adjacent to the end of the outfall pipe or diffuser ports.

UNITED STATES ENVIRONMENTAL PROTECTION AGENCY
NEW ENGLAND - REGION 1
5 POST OFFICE SQUARE, SUITE 100
BOSTON, MASSACHUSETTS 02109-3912

FACT SHEET

DRAFT NATIONAL POLLUTANT DISCHARGE ELIMINATION SYSTEM (NPDES) PERMIT TO DISCHARGE TO WATERS OF THE UNITED STATES PURSUANT TO THE CLEAN WATER ACT (CWA)

NPDES PERMIT NUMBER: MA0004006

PUBLIC NOTICE START AND END DATES: March 14, 2014-May 12, 2014

NAME AND MAILING ADDRESS OF APPLICANT:

Sunoco Partners Marketing and Terminals L.P.
467 Chelsea Street
East Boston, MA 02128

NAME AND ADDRESS OF FACILITY WHERE DISCHARGE OCCURS:

Sunoco Logistics East Boston Terminal
467 Chelsea Street
East Boston, MA 02128

RECEIVING WATER: Chelsea River (MA71-06)
Mystic River Watershed

RECEIVING WATER CLASSIFICATION: SB (CSO)

SIC CODES: 5171 (Petroleum Bulk Stations & Terminals)
4491 (Marine Cargo Handling)

Table of Contents

Attachments:

1. Proposed Action, Type of Facility, and Discharge Location

1.1 Proposed Action

The above applicant has applied to the U.S. Environmental Protection Agency (EPA) and the Massachusetts Department of Environmental Protection (MassDEP) for re-issuance of a National Pollutant Discharge Elimination System (NPDES) permit to discharge treated stormwater runoff, hydrostatic testing water, and treated groundwater remediation effluent into the designated receiving waters. The current permit ("2006 Permit") issued on August 25, 2006 to Conoco Phillips Company, expired October 31, 2011. EPA received a permit renewal application from the Conoco Phillips Company dated April 26, 2011. The East Boston Terminal was acquired by Sunoco Partners Marketing and Terminals L.P. ("Sunoco"), the current owner and Permittee, effective September 1, 2011. EPA issued a Notice of Deficiency letter dated October 31, 2011 regarding the reapplication, to which Sunoco responded on March 30 and May 8, 2012. Since the permit renewal application was deemed timely and complete by EPA, the permit has been administratively continued pursuant to 40 CFR §122.6 and §122.21(d). The Draft Permit is based on, in part, the information provided in the application.

1.2 Type of Facility

The Sunoco terminal (the "Terminal"), located in East Boston, Massachusetts, receives, stores and distributes petroleum products. The Terminal handles gasoline, low sulfur diesel, jet fuel and fuel additives, including ethanol. The Terminal receives bulk quantities of petroleum products and ethanol via ship or barge at the Terminal marine vessel dock. Product is then transferred to aboveground storage tanks (ASTs) located within the Terminal tank farm areas. Final distribution of product is conducted primarily at the Terminal truck loading rack with the exception of the jet fuel, which is delivered to Logan International Airport via a direct, dedicated pipeline. Attachment 1 shows the location of the Terminal.

1.3 Discharge Location

The Terminal is located on an approximately 28-acre site between the Chelsea River and Chelsea and Bremen Streets in East Boston, Massachusetts. The Terminal is located along the southern bank of the Chelsea River and east of the confluence with the Mystic River. Outfall 001 is located at Latitude 42° 23' 5.38" N Longitude 71° 01' 26.76" W. Outfall 002 is located at Latitude 42° 22' 55.48" N Longitude 71° 01' 34.82" W. Attachment 2 shows the site plan for the Terminal.

2. Description of Discharge

The NPDES permitted discharge to the Chelsea River via Outfall 001 consists of treated: 1) stormwater runoff; 2) hydrostatic test water; and 3) groundwater remediation effluent. The stormwater, hydrostatic test water, and treated groundwater is collected in two dedicated tanks, and processed through the Terminal's treatment system prior to discharge to the Chelsea River through Outfall 001. Outfall 002, an internal outfall established in the 2006 Permit, was established to limit and monitor treated groundwater remediation effluent. Discharge monitoring data from the previous five years (i.e., January 1, 2009 through December 31, 2013) for Outfalls 001 and 002 are included in Attachment 3.

3. Receiving Water Description

The Terminal discharges effluent through Outfall 001 to Chelsea River Segment MA71-06, which flows from the north or south along the western edge of a portion of the Terminal site, depending on the tidal stage. This segment is 0.38 square miles between the confluence with Mill Creek, in Chelsea/Revere to the confluence with the Boston Inner Harbor, in Chelsea/East Boston/Charlestown. The Terminal is approximately 0.5 miles east of the inlet to Chelsea River at the confluence with the Mystic River and Boston Inner Harbor. MassDEP classifies this segment of the Chelsea River as Class SB (CSO).[1] Class SB waters are described in the Commonwealth of Massachusetts Surface Water Quality Standards (WQSs) (314 CMR 4.05(4)(b)) as follows: *"These waters are designated as a habitat for fish, other aquatic life and wildlife, including for their reproduction, migration, growth and other critical functions, and for primary and secondary contact recreation. In certain waters, habitat for fish, other aquatic life and wildlife may include, but is not limited to, seagrass…These waters shall have consistently good aesthetic value."* The Chelsea River is one of eleven Designated Port Areas (DPAs) established by the Massachusetts Office of Coastal Zone Management to promote and protect water-dependent industrial uses. The Chelsea River is part of the Mystic River Basin and the Boston Harbor Drainage Area.

The Chelsea River segment MA71-06 is listed as a Category 5 "Waters Requiring a TMDL" on the Final Massachusetts Year 2012 Integrated List of Waters (CWA Sections 303d and 305b)[2]. The pollutants and conditions requiring a Total Maximum Daily Load (TMDL) are ammonia (un-ionized), fecal coliform, dissolved oxygen, polychlorinated biphenyls (PCBs) in fish tissue, petroleum hydrocarbons, sediment screening value, taste and odor, and turbidity. This segment is also impaired for debris/floatables/trash, which is considered a non-pollutant and does not require a TMDL. The status of each designated use described in the Mystic River Watershed and Coastal Drainage Area 2004-2008 Water Quality Assessment Report (WQAR)[3] is presented in Table 1.

Table 1: Summary of Designated Uses for Chelsea River Segment MA71-06

Designated Use	**Status**
Aquatic Life	Impaired
Aesthetics	Impaired
Primary Contact	Impaired
Secondary Contact	Impaired
Fish Consumption	Impaired
Shellfishing	Impaired

The Aquatic Life, Aesthetics, Primary Contact and Secondary Contact uses are assessed as impaired given the frequent oil spills in the Chelsea River and in the instance of the Aquatic Life use,

[1] http://www.mass.gov/eea/docs/dep/water/laws/i-thru-z/tblfig.pdf
[2] Massachusetts Year 2012 Integrated List of Waters (Final). MassDEP Division of Watershed Management Watershed Planning Program, Worcester, Massachusetts; March 2013. http://www.mass.gov/eea/docs/dep/water/resources/07v5/12list2.pdf
[3] *Mystic River Watershed and Coastal Drainage Area 2004-2008 Water Quality Assessment Report*. MassDEP Division of Watershed Management, Worcester, Massachusetts; March 2010, Report Number: 71-AC-2. http://www.mass.gov/eea/docs/dep/water/resources/71wqar09/71wqar09.pdf

contaminated sediments. The WQAR identified the sources of these impairments as aboveground storage tank leaks (from tank farms), accidental releases/spills and/or cargo loading/unloading associated with bulk petroleum terminals, and municipal sources (i.e., an urbanized high-density area). In the instance of the Aquatic Life and Aesthetics uses, the WQAR additionally notes contamination of groundwater as a result of petroleum releases as a source. Petroleum is explicitly listed as the cause of these impairments. Regarding contaminated sediments as an additional cause of the Aquatic Life impairment, a 2002 United States Geological Survey study identified chemicals present in sufficiently high concentrations in Chelsea River sediment to pose a threat to benthic organisms.[4]

The Fish Consumption and Shellfishing Designated Uses are listed as impaired as a result of PCBs in fish tissue and fecal coliform, respectively. The WQAR also notes "other contaminants in fish and shellfish". The source of these impairments is listed as unknown.

4. Permit Limitations and Conditions

The effluent limitations and all other requirements are found in the Draft Permit. The basis for the limits and other permit requirements are described below.

5. Permit Basis: Statutory and Regulatory Authority

5.1 General Requirements

The Clean Water Act (CWA) prohibits the discharge of pollutants to waters of the United States without a National Pollutant Discharge Elimination System (NPDES) permit unless such a discharge is otherwise authorized by the CWA. The NPDES permit is the mechanism used to implement technology and water quality-based effluent limitations and other requirements including monitoring and reporting. The NPDES Draft Permit was developed in accordance with various statutory and regulatory requirements established pursuant to the CWA and applicable State regulations. The regulations governing the EPA NPDES permit program are generally found at 40 CFR Parts 122, 124, 125, and 136. In this permit, EPA considered (a) technology-based requirements, (b) water quality-based requirements, and (c) all limitations and requirements in the current/existing permit, when developing the permit limits. Section 402(p) of the CWA requires that EPA issue NPDES permits for stormwater discharges which were permitted prior to February 4, 1987, 40 CFR §122.26(a)(1)(i).

5.2 Technology-Based Requirements

Subpart A of 40 CFR §125 establishes criteria and standards for the imposition of technology-based treatment requirements in permits under Section 301(b) of the CWA, including the application of EPA promulgated effluent limitations and case-by-case determinations of effluent limitations under Section 402(a)(1) of the CWA.

Technology-based treatment requirements represent the minimum level of control that must be imposed under Sections 301(b) and 402 of the CWA (see 40 CFR §125 Subpart A) to meet best

[4] Breault, R.F., Durant, J.L., and Robbat, A, 2002. *Sediment quality of lakes, rivers, and estuaries in the Mystic River Basin, Eastern Massachusetts, 2001–03*. U.S. Geological Survey Scientific Investigations Report: 2002-5191, 110 p.

practicable control technology currently available (BPT) for conventional pollutants and some metals, best conventional control technology (BCT) for conventional pollutants, and best available technology economically achievable (BAT) for toxic and non-conventional pollutants. In general, technology-based effluent guidelines for non-POTW facilities must be complied with as expeditiously as practicable, but in no case later than three years after the date such limitations are established, and in no case later than March 31, 1989 (see 40 CFR §125.3(a)(2)). A NPDES permit cannot authorize compliance schedules and deadlines which are not in accordance with the statutory provisions of the CWA.

Technology-based National Effluent Limitation Guidelines (ELGs) were promulgated in 2000 for discharges from washing activities at marine cargo handling facilities (40 CFR 442, Subpart C., Standard Industrial Code 4491). However, these ELGs do not apply because Sunoco does not engage in washing the interiors of tank barges or sea tankers at the Terminal. In 2003, EPA selected discharges from the petroleum refining category (Standard Industrial Code 2911) for further review for the technology-based ELGs to determine if a new subcategory for petroleum bulk stations and terminals category (SIC 5171) was necessary. EPA determined in its *Technical Support Document for the 2004 Effluent Guidelines Program Plan*[5] ("ELG Document") that these facilities were better regulated on a case-by-case basis using Best Professional Judgment (BPJ).

The Terminal is ineligible for EPA's 2008 Multi-Sector General Permit (MSGP) for stormwater associated with industrial activity because discharges from the Terminal are already covered under an individual industrial permit issued before February 4, 1987. The Permittee does not have separate coverage for discharges of hydrostatic test line water through EPA Region 1's 2010 Remediation General Permit (RGP).

In the absence of technology-based ELGs, the permit writer is authorized under Section 402(a)(1)(B) of the CWA to establish technology-based effluent limitations (TBELs) on a case-by-case basis using BPJ. The NPDES regulations in 40 CFR §125.3(c)(2) state that permits developed on a case-by-case basis under Section 402 (a)(1) of the CWA must consider 1) the appropriate technology for the category class of point sources of which the applicant is a member, based on available information, and 2) any unique factors relating to the applicant.

Where appropriate, EPA evaluated the ELG Document, MSGP, RGP and ELGs for industrial sectors with similar operations, pollutants, and/or treatment technologies in its case-by-case evaluation of technology-based effluent limitations.

5.3 Water Quality-Based Requirements

Section 301(b)(1)(C) of the CWA requires that effluent limitations based on water quality considerations be established for point source discharges when such limitations are necessary to meet state or federal water quality standards that are applicable to the designated receiving water. This is necessary when technology-based limitations would interfere with the attainment or maintenance of water quality in the receiving water.

---

[5] EPA Office of Science and Technology. *Technical Support Document for the 2004 Effluent Guidelines Program Plan* (EPA-821-R-04-014: August 2004, Section 7.12, P 72-127.

Under Section 301(b)(1)(C) of the CWA and EPA regulations, NPDES permits must contain effluent limits more stringent than technology-based limits where more stringent limits are necessary to maintain or achieve state or federal water quality standards. Water quality standards consist of three parts: (1) beneficial designated uses for a water-body or a segment of a water-body; (2) numeric and/or narrative water quality criteria sufficient to protect the assigned designated use(s); and (3) anti-degradation requirements to ensure that once a use is attained it will not be degraded. The Massachusetts Surface Water Quality Standards (WQSs), found at 314 CMR 4.00, include these elements. The State will limit or prohibit discharges of pollutants to surface waters to assure that surface water quality standards of the receiving waters are protected and maintained or attained. These standards also include requirements for the regulation and control of toxic constituents and require that EPA criteria, established pursuant to Section 304(a) of the CWA, shall be used unless site specific criteria are established.

The Draft Permit must limit any pollutant or pollutant parameter (conventional, non-conventional, and toxic) that is or may be discharged at a level that causes or has the “reasonable potential” to cause or contribute to an excursion above any water quality standard (40 CFR §122.44(d)). An excursion occurs if the projected or actual in-stream concentration exceeds an applicable water quality criterion. In determining “reasonable potential”, EPA considers: (1) existing controls on point and non-point sources of pollution; (2) pollutant concentration and variability in the effluent and receiving water as determined from the permit's re-issuance application, monthly discharge monitoring reports (DMRs), and State and Federal Water Quality Reports; (3) sensitivity of the indicator species used in toxicity testing; (4) known water quality impacts of processes on waste waters; and (5) where appropriate, dilution of the effluent in the receiving water.

5.4 Anti-Backsliding

A permit may not be renewed, reissued or modified with less stringent limitations or conditions than those contained in the previous permit unless in compliance with the anti-backsliding requirements of the CWA [see Sections 402(o) and 303(d)(4) of the CWA and 40 CFR §122.44(l)(1 and 2)]. EPA's anti-backsliding provisions prohibit the relaxation of permit limits, standards, and conditions except under certain circumstances. Effluent limits based on BPJ, water quality, and state certification requirements must also meet the anti-backsliding provisions found at Section 402(o) and 303(d)(4) of the CWA.

All proposed limitations in the Draft Permit are at least as stringent as limitations included in the 2006 Permit. Therefore, the Draft Permit complies with the anti-backsliding requirements of the CWA.

5.5 Anti-Degradation

Federal regulations found at 40 CFR §131.12 require states to develop and adopt a statewide anti-degradation policy which maintains and protects existing instream water uses and the level of water quality necessary to protect the existing uses, and maintains the quality of waters which exceed levels necessary to support propagation of fish, shellfish, and wildlife and to support recreation in and on the water. The Massachusetts Anti-degradation Regulations are found at 314 CMR 4.04. There are no new or increased discharges being proposed with this permit reissuance. Therefore, EPA does not

believe that the MassDEP is required to conduct an anti-degradation review regarding this permit reissuance.

5.6 State Certification

Under Section 401 of the CWA, EPA is required to obtain certification from the state in which the discharge is located that all water quality standards or other applicable requirements of state law, in accordance with Section 301(b)(1)(C) of the CWA, are satisfied. EPA permits are to include any conditions required in the state's certification as being necessary to ensure compliance with state water quality standards or other applicable requirements of state law. See CWA Section 401(a) and 40 CFR §124.53(e). Regulations governing state certification are set out at 40 CFR §124.53 and §124.55. EPA regulations pertaining to permit limits based upon water quality standards and state requirements are contained in 40 CFR §122.44(d).

6. Explanation of the Permit's Effluent Limitations

6.1 Facility Information

The Terminal is located on an industrial site approximately 28 acres in size and consists of a marine vessel dock with bulk unloading facilities, a tank farm consisting of aboveground petroleum storage tanks, a truck loading rack, a maintenance garage, and an administration building.

The Terminal receives petroleum products in bulk quantities by ship or barge with the exception of a limited inventory of fuel additives, heating oil for the buildings and maintenance materials provided by truck. The bulk unloading facilities are located on the Chelsea River, on the north side of the Terminal site. Petroleum products consists of gasoline, low sulfur diesel, and jet fuel. Products are primarily distributed by tank truck via the truck loading rack. However, jet fuel is delivered to Logan International Airport via a direct, dedicated pipeline. Petroleum products are stored in 20 ASTs ranging in capacity from 281,600 gallons to 8,502,000 gallons. The tanks are situated within 12 secondary containment areas. The total storage capacity at the Terminal is 41.7 million gallons.

In addition to petroleum products, the Terminal stores and uses petroleum additives, which are mixed with gasoline or diesel on site at the truck loading rack. In addition to additives specific to branded gasoline, the Terminal began receiving and distributing ethanol (EtOH) in April 2006. EtOH has replaced methyl tertiary-butyl ether (MtBE) as the primary gasoline oxygenate used by Sunoco, as it meets Clean Air Act requirements and is generally considered less toxic than MtBE. Ethanol is received by marine vessel and stored in Tank 126, a 2.7 million gallon tank. Other additives and heating oil for the administration building are delivered to the Terminal by truck.

The truck loading rack is located near the southwest corner of the site with truck access from Chelsea Street. The loading rack consists of a paved surface with 16 bays at which tanker trucks are loaded with product. Sunoco currently uses seven of the 16 bays. As described below, actions are in progress in the loading rack area to remediate petroleum-contaminated groundwater. Additional paved areas abut or surround the maintenance garage and administration building, which are located in the eastern portion of the site between Chelsea Street and the Chelsea River.

6.2 Permitted Outfalls

The Draft Permit authorizes discharges of: 1) stormwater runoff; 2) hydrostatic test water; and 3) groundwater remediation effluent from internal Outfall 002. Discharges of groundwater remediation effluent are limited and monitored at internal Outfall 002 prior to mixing with any other waste stream. A schematic showing flow contributions to Outfalls 001 and 002 is presented in Attachment 4.

6.2.1 Stormwater

Stormwater is collected at the Terminal from the following areas: 1) tank farm and 2) terminal yard. Stormwater runoff from these areas is visually inspected, drained and pumped to tanks 50 and/or 57 for storage. Stormwater is drained from these tanks and treated in the stormwater treatment system prior to discharge via Outfall 001. More than 90% of the approximately 20 million gallons per year discharged from Outfall 001 is stormwater.

Each secondary containment area in the tank farm is equipped with a pump wet well and conveyances, which transfer water from containment areas to tanks 50 and/or 57. The containment areas are not paved, allowing a portion of rainwater to infiltrate into the ground during a precipitation event. When the containment areas begin to fill up, a Sunoco operator inspects the accumulated stormwater. If no petroleum sheen is observed, the operator activates the wet well pump. The pump shuts down automatically when the water in the wet well draws down to a preset low level and must be manually restarted. If any petroleum sheen is observed, Sunoco personnel use absorbent pads to soak up the product causing the sheen before starting the wet well pump. Sunoco sometimes transfers stormwater from one containment area to another if equipment in a particular containment area is at risk of flooding.

The truck loading rack in the terminal yard, where product is mixed and distributed to tanker trucks, is a paved area surrounded by a shallow concrete berm. Any incidental spills or stormwater falling within this area is collected in a dedicated loading rack area drainage system and pumped into a nearby AST. Rain falling on the loading rack roof, which partially covers the loading rack, collects in perimeter gutters and is transferred to the stormwater storage tanks. Sunoco previously disposed of this stormwater offsite. However, because this stormwater is not expected to differ significantly physically or chemically from other stormwater in incidental contact with materials stored at the Terminal, Sunoco has requested that the Draft Permit allow this stormwater to be discharged to tanks 50 and/or 57 for treatment in the stormwater treatment system prior to discharge via Outfall 001. The Draft Permit authorizes this discharge.

The two tanks used for stormwater storage are currently hydraulically connected. These tanks are designed to retain the volume expected from a 10-year, 24 hour storm. Under normal operational conditions, these tanks, in combination with the containment areas, store the Terminal's wastewater until treatment and discharge is necessary. Sunoco inspects the water surface in the tank for petroleum sheen. If a visible sheen is apparent, floating product can be removed from the water surface with oil-absorbent material or the tank can be drained to the 7 foot level (via a tank port at that level) to decant the floating product. From the storage tanks, the stormwater is transferred to the stormwater treatment system with a centrifugal pump.

The stormwater treatment system is housed in a corrugated steel building located near the Terminal marine vessel dock. It consists of an American Petroleum Institute (API) cone-bottom cylindrical oil/water separator (OWS) equipped with coalescing media. After the separator, the water flows through multimedia sand filters (two trains of three filters in series, each), followed by two 20,000-pound carbon adsorption units in series. Attachment 5 shows a schematic of flow from tanks 50 and 57 through the stormwater treatment system.

6.2.2 Hydrostatic Test Water

The aboveground storage tanks are subject to annual external inspections (502 CMR 5.00) and their integrity is certified annually by a licensed tank inspector. Internal inspections of the above ground storage tanks are conducted every 10 years. The testing procedures followed are detailed in API 653 Standard. In addition, repairs are made at the Terminal to tanks and piping used for the storage and conveyance of petroleum products and additives. To ensure safe working conditions during this maintenance work, storage tanks and/or pipe networks are rigorously cleaned (e.g. “Poly Brushed”, “Squeegee Pigged”) and certified as being product-free. After completing certain maintenance work, the vessels and/or pipe networks may be hydrostatically tested for leaks. Hydrostatic testing involves filling the vessel or pipe with water under pressure and monitoring pressure drops over time. If the system maintains a constant pressure, there are no leaks. River water or potable water may be used as a source of hydrostatic test water. Thus, hydrostatic test water discharge may contain minimal amounts of foreign matter, trace amounts of hydrocarbons, background material found in the river, or residual chlorine. Hydrostatic test water discharges have not been completed at the Terminal since Sunoco assumed operations at the Terminal. Historically, approximately 1.1 million gallons of hydrostatic test water are discharged from Outfall 001 each year.

6.2.3 Groundwater Remediation Effluent

There is groundwater and soil remediation ongoing at the Terminal under the Massachusetts Contingency Plan (MCP) (310 CMR 40.0000). The main area of contamination is located under the loading rack area and consists of gasoline and fuel oils. The remediation consists of two remediation systems, (one built in 2003, and one built in 2006) and an oil recovery project. The systems consist of soil vapor extraction (SVE) and groundwater treatment in the loading rack area. The oil recovery project is a product-only recovery effort in the loading rack and the tank farm area on the east side of Chelsea Street and does not involve groundwater extraction or discharges. The product collected through these efforts is shipped off site for disposal.

The SVE system consists of a network of shallow screened wells used to depress the water table (via low flow groundwater pumps) and extract petroleum-laden air from the unsaturated zone. The air is drawn from the soil via two blowers, housed in a treatment trailer. Vapor phase carbon units are used to treat the extracted air. The system recovers water and oil from 13 wells in the loading rack area using down-well pneumatic groundwater depression pumps. The groundwater depression pumps operate about 90% of the time. When the pumps are first turned on, the well pumps produce a total flow of about 10 gallons per minute (GPM) of groundwater and product. However, the pumps typically stabilize at an average total flow of 3 to 5 GPM with occasional shutdowns for maintenance activities.

The 2006 Permit required installation of a groundwater treatment system specifically to treat groundwater contaminants of concern. The groundwater treatment system consists of the following:

1. Product removal in an OWS;
2. Flow equalization in a frac tank equipped with a discharge pump;
3. Filtration through two bag filters, in series, to remove oxidized iron;
4. Carbon adsorption through two 500-pound liquid-phase granular activated carbon units, in series, to reduce the concentration of petroleum organic compounds in the waste stream;
5. Filtration through two additional bag filters, in series, to further reduce the amount of particulates; and
6. Cyanide removal through two specially treated 500-pound liquid-phase granular activated carbon units, in series.

The groundwater treatment system contributes groundwater flows to Outfall 001 through internal Outfall 002. Outfall 002 was established in the 2006 Permit upstream of the stormwater treatment system and Outfall 001 to ensure that monitoring results reflect the true characteristics of the remediation waste stream and not the stormwater with which it is being mixed (see 40 CFR §122.45(h)). Attachment 6 shows a schematic of the flow through the groundwater treatment system.

6.2.4 Other Non-Stormwater Discharges

Additional non-stormwater discharges are authorized for Outfall 001 under this permit, provided the additional non-stormwater discharges meet all effluent limitations in the Draft Permit. These discharges, listed below, are based on non-stormwater discharges allowable under EPA's MSGP.

- Discharges from fire-fighting activities;
- Fire hydrant flushings;
- Potable water (e.g., water line flushings) unless associated with hydrostatic testing;
- Uncontaminated condensate from air conditioners, coolers, and other compressors and from the outside storage of refrigerated gases or liquids;
- Irrigation drainage;
- Landscape watering provided all pesticides, herbicides, and fertilizer have been applied in accordance with the approved labeling;
- Pavement wash waters where no detergents are used and no spills or leaks of toxic or hazardous materials have occurred;
- Routine external building washdown that does not use detergents;
- Uncontaminated groundwater;
- Foundation or footing drains where flows are not contaminated with process materials; and
- Incidental windblown mist from boilers and/or cooling towers that collects on rooftops or adjacent portions of the Terminal, unless associated with intentional discharges from these structures (e.g., boiler blowdown).

7. Derivation of Effluent Limits under the Federal CWA and the Commonwealth of Massachusetts' Water Quality Standards

7.1 Flow

From January 1, 2009 through December 31, 2013, total monthly flow reported for Outfall 001 ranged from 0.097 to 9.8 million gallons (Mgal) and the total monthly flow reported for Outfall 002 ranged from 0.0001 to 0.11 Mgal. The daily maximum flow rate reported for this period ranged from 0.6 to 530.5 GPM for Outfall 001. The average monthly flow rate reported for this period ranged from 0.2 to 430.4 GPM for Outfall 002. The daily maximum flow rate reported for this period ranged from 1.8 to 62.5 GPM for Outfall 002. The average monthly flow rate reported for this period ranged from 0.0182 to 2.4 GPM.

OWSs are the typical minimum treatment technology employed by petroleum bulk storage terminals for treatment of stormwater runoff. This device uses gravity to separate lower-density oils from water, resulting in an oil phase above the oil/water interface and a heavier particulate phase on the bottom of the separator. The sizing of an OWS is based upon the flow rate, density of oil to be separated, desired percent removal of oil, and the operating temperature range. As described above, groundwater is first treated through the groundwater treatment system (OWS, filtration and carbon adsorption), mixes with stormwater, and is subject to additional treatment through the stormwater treatment system (OWS, sand filtration and carbon adsorption). The Terminal discharges to the Chelsea River through Outfall 001 after treatment. The maximum design flow rating for the stormwater treatment system OWS at the Terminal is 600 GPM. The flow from Tank 50 and/or 57 through the OWS is controlled by limiting the rate at which stormwater is pumped out of the storage tank. The influent side of the OWS is equipped with a manually operated transfer pump and an in-line orifice plate restrictor used to throttle the flow from the storage tanks to the OWS so that it does not exceed the capacity of the separator.

The 2006 Permit required monitoring of the flow rate using a totalizer or similar device. The 2006 Permit also required that the Permittee notify EPA and MassDEP of any proposed changes to either the groundwater or stormwater conveyance or treatment systems that could cause the maximum design flow rate through any component of the stormwater or groundwater treatment system to be exceeded. To ensure that the flow through the OWS be maintained at or below the maximum design flow rate, such that the oil and/or particulate phases potentially present in the stormwater treatment system are not entrained to the waterway, the Draft Permit establishes a daily maximum flow rate limit of 600 GPM, the maximum flow rate of the system. The Draft Permit also maintains the requirement for reporting of total flow, and that the flow rate and total flow be measured using a totalizer or similar device. Additionally, the Draft Permit requires reporting the total number of discharge events that occur each month, in order to better characterize the frequency of discharges from the Terminal.

The Draft Permit has revised the requirements to monitor and report the daily maximum flow rate and total flow of treated groundwater such that a flow meter is now required. The Draft Permit further requires that flow through the groundwater treatment system, as measured at Outfall 002, shall not exceed the system's design flow capacity, 30 GPM. The Permittee must document the measures and methods used to control flow through both the stormwater and groundwater treatment systems in its Stormwater Pollution Prevention Plan (SWPPP) (see requirements below).

Effluent discharged from the stormwater treatment system does not necessarily correlate to specific rainfall events due to storage of stormwater and retention time in Tank 50 and/or 57. In addition, samples collected only in association with a qualifying rainfall event may not provide data representative of discharges from the Terminal since the effluent includes non-stormwater discharges. As a result, the 2006 Permit required effluent sampling during discharge. Therefore, the Draft Permit maintains the requirement for effluent sampling during periods of discharge from the stormwater treatment system and not necessarily during periods associated with a specific precipitation event. The Permittee must document the measures and methods used to control flow through the stormwater treatment system in its Stormwater Pollution Prevention Plan (SWPPP) (see requirements below).

7.2 Conventional Pollutants

7.2.1 pH

The 2006 Permit required that the pH of the effluent must be no less than 6.5 standard units (SU), and no greater than 8.5 SU for both outfalls. From January 1, 2009 through December 31, 2013, pH levels have ranged from 6.04 SU to 9 SU for Outfall 001 and 6 SU to 7.8 SU for Outfall 002. The Massachusetts Surface WQSs, 314 CMR 4.05(4)(b)3, for Class SB waters require pH to be within the range of 6.5 to 8.5 SU and prohibit discharges that cause the in-stream pH to change more than 0.2 SU outside of the background range. The Draft Permit maintains a pH range of 6.5 to 8.5 SU for Outfalls 001 and 002, and specifies that the pH cannot be more than 0.2 standard units outside of the natural background range, consistent with Massachusetts WQSs.

7.2.2 Total Suspended Solids (TSS)

Heavy metals and polycyclic aromatic hydrocarbons (PAHs) are readily adsorbed onto particulate matter and the release of these compounds into the environment can be reduced by regulating the amount of suspended solids discharged. The 2006 Permit included a daily maximum effluent limit of 100 mg/L and a monthly average effluent limit of 30 mg/L for TSS, monitored twice monthly, for both outfalls. From January 1, 2009 through December 31, 2013, daily maximum TSS levels have ranged from below laboratory practical quantitation limits (PQLs) to 11 mg/L at Outfall 001.

In establishing the technology-based limits in the 2006 Permit, EPA considered similar facilities and the Terminal's use of an OWS. In the technology guidelines promulgated at 40 CFR §423 for the Steam Electric Power Point Source Category, the storage of fuel oil at steam electric facilities at the time the technology guidelines were promulgated was similar to the storage of petroleum products at bulk stations and terminals. In developing effluent limits for the Steam Electric Power Point Source Category, EPA identified TSS as a potential pollutant due to the drainage associated with equipment containing fuel oil and/or the leakage associated with the storage of oil.[6] EPA then considered the level of treatment that could be technologically achieved for TSS using an OWS and set corresponding limits in the guidelines (see 40 CFR §423.12 (b)(3)). In reviewing the technology-based limits for TSS for the Draft Permit, EPA determined that operations at the Terminal remain consistent with the conditions under which the technology guidelines promulgated at 40 CFR §423 can be achieved. Furthermore, EPA determined that the TSS limits in the Draft Permit are similar to

[6] See *Development Document for Effluent Limitations Guidelines and Standards and Pretreatment Standards for the Steam Electric Point Source Category*. EPA-440-1-82-029. Washington, DC. (November, 1982).

technology-based limits established for other facilities in Region 1 and similar facilities in other regions, as described in the ELG Document.

Therefore, the Draft Permit maintains the maximum daily limit of 100 mg/L, and an average monthly limit of 30 mg/L, monitored monthly, for Outfall 001, consistent with anti-backsliding requirements found in 40 CFR §122.44(l).

7.2.3 Oil and Grease (O&G)

For Class SB waters, the Massachusetts Surface WQSs, 314 CMR 4.05(4)(b)(7), state "*These waters shall be free from oil, grease and petrochemicals that produce a visible film on the surface of the water, impart an oily taste to the water or an oily or other undesirable taste to the edible portions of aquatic life, coat the banks or bottom of the water course, or are deleterious or become toxic to aquatic life.*" From January 1, 2009 through December 31, 2013, O&G levels have ranged from below the laboratory PQLs to 7.16 mg/L for Outfall 001.

A concentration of 15 mg/L is recognized as the level at which many oils produce a visible sheen and/or cause an undesirable taste in fish.[7] As described above, the Chelsea River is listed as impaired for taste and odor. The 2006 Permit limit of 15 mg/L is based on the benchmark level from EPA-Headquarters guidance to, and as a means of establishing a categorization within, the petroleum marketing terminals and oil production-facilities categories.[8] Maintaining O&G levels at or below this benchmark level will demonstrate compliance with Massachusetts WQSs. Performance data from terminals in Massachusetts and Maine continue to support that this effluent limit can be achieved through the proper operation of a correctly-sized OWS and properly implemented best management practices (BMPs).

Given water quality concerns regarding taste and odor in the Chelsea River, and to ensure compliance with Massachusetts WQSs and anti-backsliding requirements found in 40 CFR §122.44(l), the Draft Permit maintains the maximum daily limit for O&G of 15 mg/L, monitored monthly, for Outfall 001.

7.3 Toxic & Non-Conventional Pollutants

7.3.1 Volatile Organic Compounds (VOCs)

Refined petroleum products contain numerous types of hydrocarbons. Individual components partition to environmental media based on physical and chemical properties including solubility and vapor pressure. Rather than establishing effluent limits for every compound found in petroleum products, limits are typically established for the compounds that would be the most difficult to remove from the environment and demonstrate the greatest degree of toxicity. Generally, the higher the solubility of a VOC in water, the more difficult it is to remove. VOCs such as benzene, toluene, ethyl benzene, and the three xylene compounds (i.e., total xylenes) (BTEX) are found at relatively high concentrations in gasoline and light distillates including diesel fuel. BTEX concentrations decrease in the heavier grades of petroleum distillate products such as fuel oils.

---

[7] USEPA. 1976. *The Red Book – Quality Criteria for Water.* July 1976.
[8] See *Additional Guidance for Petroleum Marketing Terminals and Oil Production Facilities.* N-74-1. Washington, D.C. (July, 1974).

As described in Section 3, the Chelsea River listing in the Final Massachusetts Year 2012 Integrated List of Waters includes petroleum hydrocarbons (i.e., a class of compounds that includes BTEX) as a pollutant requiring a TMDL. The bulk petroleum storage facilities that discharge to the Chelsea River, including the Terminal, are explicitly noted as one of the sources of these pollutants. In reviewing this impairment, EPA received information from MassDEP confirming that the impairments related to this pollutant are to the Aquatic Life, Aesthetics, Primary Contact and Secondary Contact Uses.[9] In addition, MassDEP has not determined which individual compounds in the pollutant class, petroleum hydrocarbons, cause or contribute to the impairment. As a result, EPA considered the petroleum hydrocarbon compounds that are more likely to be present in the effluent based on monitoring data for the Terminal and similar facilities, and information documented in EPA's ELG Document for the industrial category. Further, EPA assumed the receiving water does not have available assimilative capacity for petroleum hydrocarbons given the toxic potential of the compounds and the impairment status of the receiving water.

EPA reviewed all appropriate criteria including the most recent *National Recommended Water Quality Criteria*, quarterly monitoring results for BTEX obtained from the discharges of the Terminal and similar facilities along the Chelsea and Mystic Rivers,[10] information relevant to the types of petroleum products stored at the Terminal,[11] and available ambient monitoring data.[12] These data show that concentrations of BTEX and other petroleum hydrocarbons are typical in the effluent and may be present in surface water and/or sediment in the Chelsea River. EPA also reviewed the Massachusetts Waste Site/Reportable Releases Lookup for the Terminal to determine sources of VOCs.[13] Release Tracking Number (RTN) listings indicate that at least 15 reportable conditions have been documented at the Terminal. Seven involve reportable conditions related to gasoline, and/or jet fuel, three of which were reported in 2013. These petroleum products contain BTEX in varying concentrations.

The 2006 Permit included a daily maximum effluent limit of 40 µg/L at Outfall 001 for benzene, and a daily maximum effluent limit of 5 µg/L at Outfall 002 for benzene. Quarterly monitoring of toluene, ethylbenzene and total xylenes was also required. From January 1, 2009 through December 31, 2013, ethylbenzene was not detected above the laboratory PQLs (ranging from 1 to 5 µg/L or 1 to 5 parts per billion) at Outfall 001 or Outfall 002. Benzene and toluene were also not detected above PQLs at Outfall 002. Benzene, toluene and total xylenes were detected on one occasion in 2009 at Outfall 001. On this occasion, benzene exceeded the 2006 Permit limit of 40 µg/L at Outfall 001. Benzene was detected on five other occasions prior to 2009, below the 2006 Permit limit at Outfall 001. Total xylenes were detected at Outfall 002 on one occasion in 2011 at Outfall 002.

---

[9] Correspondence to Shauna Little dated January 13, 2014 from Laurie Kennedy, MassDEP Division of Watershed Management, Watershed Planning Program.
[10] See effluent and/or ambient monitoring data for NPDES permit numbers MA0004006, MA0003425, MA0003298, MA0003280, MA0001091, and MA0000825.
[11] See Agency for Toxic Substances and Disease Registry Toxic Substances Portal entries for benzene at http://www.atsdr.cdc.gov/substances/toxsubstance.asp?toxid=14
[12] See "Sediment Quality of Lakes, Rivers, and Estuaries in the Mystic River Basin, Eastern Massachusetts, 2001–03." United States Geological Survey, Scientific Investigations Report 2002-5191; and Massachusetts Water Resources Authority Boston Harbor & Tributary Rivers Water Quality Monitoring Program, sampling location 027, Chelsea River.
[13] Available at http://public.dep.state.ma.us/SearchableSites2/Search.aspx.

In determining reasonable potential for concentrations of BTEX in the effluent to cause or contribute to an excursion above WQC, EPA often uses projected concentrations based on available effluent data in a steady state mixing equation. However, the 95th and 99th percentile projected effluent concentrations could not be determined given the insufficiency of the effluent data for the previous five years. Where effluent data contains a high proportion of non-detect values, current scientific literature and technical guidance[14] does not recommend statistical analysis as the uncertainty in the effluent variability and the degree of bias reduces the confidence in calculated upper concentration limits. In the absence of effluent data, EPA's *Technical Support Document for Water Quality Based Toxics Control* (TSD)[15] provides methodology for determining whether a pollutant has reasonable potential to cause or contribute to an excursion above WQC using a variety of factors and information in accordance with 40 CFR §122.44(d)(1)(ii). This may include dilution, the type of industry, existing data on toxic pollutants, history of compliance problems and toxic impact, and/or type of receiving water and designated use (see TSD page 50-51).

Based on the impairments to the Chelsea River, the presence of BTEX in discharges from the Terminal that have occasionally exceeded the 2006 Permit limit, the types of petroleum products stored at the Terminal that contain BTEX, and the presence of BTEX in available ambient monitoring data, the effluent has a reasonable potential to cause or contribute to an excursion above WQC with respect to BTEX. A limit continues to be necessary for the protection of human health (i.e., primary and secondary contact) and to meet water quality standards established under Section 303 of the CWA as well as Massachusetts' WQSs (e.g., 314 CMR 4.05(5)(e)).

Further, EPA continues to limit benzene as the indicator parameter for BTEX. Benzene was selected because of the BTEX compounds, benzene has the highest solubility, is one of the most toxic constituents, and is found at relatively high concentrations in the light distillates. The concentration of benzene in gasoline is approximately 20,000 parts per million.[16] The concentration in diesel fuel, although several orders of magnitude smaller than that found in gasoline, is still environmentally significant. The average percent by weight of benzene in diesel fuel is approximately 0.03 percent which is equivalent to a concentration of benzene of approximately 300 parts per million. This value exceeds the EPA "organism only" human health WQC for benzene, 51 µg/L (or 51 parts per billion).[17] As a result, benzene is considered one of the most important limiting parameters found in gasoline and light distillates. Benzene is also used as an indicator parameter for regulatory and characterization purposes of stormwater that is exposed to light distillate products.

The 2006 Permit WQBEL for benzene at Outfall 001, 40 µg/L, was established in the NPDES permit issued in 1990 to the Mobil Oil Company ("1990 Permit") based on the lifetime cancer risk at the 10^{-6} estimate included in the water quality criteria document for benzene.[18] While this WQBEL is more stringent than the updated human health "organism only" criterion, 51 µg/L, the Terminal has

---

[14] See *ProUCL Version 5.0.00 Technical Guide*, USEPA Regional Science Program, Technical Support Center available at http://www.epa.gov/osp/hstl/tsc/software.htm.
[15] See EPA's *Technical Support Document for Water Quality-based Toxics Control:* EPA/505/2-90-001, 1991.
[16] See "Composition of Petroleum Mixtures," Total Petroleum Hydrocarbon Criteria Working Group Series, T.L. Potter and K.E. Simmons, Vol. 2, p. 52 (May 1998).
[17] See *National Recommended Water Quality Criteria*: http://water.epa.gov/scitech/swguidance/standards/current/index.cfm
[18] See *Ambient Water Quality Criteria for Benzene*. EPA 440.5-80-018, October 1980.

demonstrated an ability to meet this limitation for Outfall 001 with proper operation and maintenance of the stormwater treatment system. The 2006 Permit also included a limitation for benzene at Outfall 002, 5 µg/L, and limit of 100 µg/L for BTEX (the sum of benzene, toluene, ethybenzene and total xylenes). The benzene TBEL for Outfall 002 is based on the type of treatment applied to the effluent, consistent with EPA's RGP for Category I, Subcategory A – Gasoline Only Sites. EPA has maintained the benzene limits of 40 µg/L at Outfall 001 and 5 µg/L at Outfall 002, as well as the limit for BTEX at Outfall 002 based on performance data from the Terminal and to ensure compliance with Massachusetts WQSs and anti-backsliding requirements found in 40 CFR §122.44(l). Because the limit for benzene at Outfall 001 is based on the "organism only" human health WQC, the limit is expressed in the Draft Permit as a monthly average limit, rather than a daily maximum, as expressed in the 2006 Permit. This correction was made in accordance with recommendations in EPA's TSD, given the exposure expected with consumption of fish or through incidental contact through primary and secondary contact recreation. The Draft Permit requires monitoring, without limits for the daily maximum concentration. The limits for Outfall 002 are expressed in the Draft Permit as a daily maximum limit.

To confirm that the use of benzene as an indicator parameter for BTEX is sufficient to meet WQSs, and to better quantify the variability of the pollutant in the effluent, the Draft Permit has increased the frequency of monitoring for benzene to monthly. To further support the use of benzene as the indicator parameter, the Draft Permit also includes monitoring for benzene, toluene, ethylbenzene and total xylenes once per year for both the effluent and the receiving water. If monitoring data for these compounds indicate any are present at concentrations that may cause or contribute to an impairment in the Chelsea River, or that indicate benzene is insufficient as an indicator parameter, the Draft Permit includes a reopener clause in Part I.D.

In addition, the Draft Permit requires that the quantitative methodology used for BTEX analysis must achieve the ML less than or equal to 2 µg/L. Sample results for an individual compound that is at or below the ML should be reported according to the latest EPA Region 1 *NPDES Permit Program Instructions for the Discharge Monitoring Report Forms (DMRs)*. The Permittee is also required to report the PQL for analysis for each compound using a data qualifier in the instance an analyte is not detected above the PQL.

It is important to note that MassDEP's alternative methods for analysis known as the Volatile Petroleum Hydrocarbon (VPH) and Extractable Petroleum Hydrocarbon (EPH), which are required by MassDEP for measuring petroleum hydrocarbons at sites being cleaned up under the MCP, are not approved under 40 CFR §136. EPA does not currently have a means to evaluate carbon range data supplied under these methods nor are the data comparable when evaluating compliance with chemical specific numerical limits for toxics related to specific water quality criteria developed for specific pollutants in NPDES permits. These methods may not be used for sampling required in the Draft Permit.

7.3.2 Polycyclic Aromatic Hydrocarbons (PAHs)

PAHs are a group of organic compounds that form through the incomplete combustion of hydrocarbons and are present in petroleum derivatives and residuals. Discharge of these products can introduce PAHs into surface water where they may volatilize, photolyze, oxidize, biodegrade, bind to

suspended particles or sediments, or accumulate in aquatic organisms (with bioconcentration factors often in the 10-10,000 range). In soils, PAHs may also undergo degradation, accumulation in plants, or transport via groundwater. In an estuarine environment such as the Chelsea River, volatilization and adsorption to suspended sediments with subsequent deposition are the primary removal processes for medium and high molecular weight PAHs. Several PAHs are well known animal carcinogens, while others can enhance the response of the carcinogenic PAHs.

There are 16 PAH compounds identified as priority pollutants under the CWA (see Appendix A to 40 CFR §423). Group I PAHs are comprised of seven known animal carcinogens. They are: benzo(a)anthracene, benzo(a)pyrene, benzo(b)fluoranthene, benzo(k)fluoranthene, chrysene, dibenzo(a,h)anthracene, and indeno(1,2,3-cd)pyrene. Group II PAHs are comprised of nine priority pollutant PAHs which are not considered carcinogens, but which can enhance or inhibit the response of the carcinogenic PAHs. They are: acenaphthene, acenaphthylene, anthracene, benzo(g,h,i)perylene, fluoranthene, fluorene, naphthalene, phenanthrene, and pyrene.

As described above, Chelsea River is impaired for the Aquatic Life, Aesthetics, Primary Contact and Secondary Contact Uses because of petroleum hydrocarbons. The bulk petroleum storage facilities that discharge to the Chelsea River, including the Terminal, are explicitly noted as one of the sources of these pollutants. Therefore, EPA followed the same approach used in evaluating BTEX to evaluate PAHs. As referenced above, EPA reviewed all appropriate criteria including the most recent *National Recommended Water Quality Criteria*, quarterly monitoring results for PAHs obtained from the discharges of the Terminal and similar facilities along the Chelsea River, information relevant to the types of petroleum products stored at the Terminal,[19] and available ambient monitoring data. These data show that concentrations of PAHs and other petroleum hydrocarbons are occasionally present in the effluent and may be present in surface water and/or sediment in the Chelsea River. In addition, the PQL for PAH analysis in available data for surface water and wastewater is typically two to six times the WQC for Group I PAHs. EPA also reviewed the Massachusetts Waste Site/Reportable Releases Lookup for the Terminal to determine possible sources of PAHs. RTN listings indicate that at least reportable condition present at the Terminal since 2006 is related to elevated concentrations of petroleum hydrocarbon fractions in soil. Historic releases also involved jet fuel and/or No. 6 fuel oil.

The 2006 Permit included TBELs for each individual Group I PAH as listed below at 10 µg/L for Outfall 001 and at the ML for analysis for each individual compound at Outfall 002:

- Benzo(a)anthracene
- Benzo(a)pyrene
- Benzo(b)fluoranthene
- Benzo(k)fluoranthene
- Chrysene
- Dibenzo(a,h)anthracene
- Indeno(1,2,3-cd)pyrene

[19] See Agency for Toxic Substances and Disease Registry Toxic Substances Portal entries for PAHs at http://www.atsdr.cdc.gov/substances/toxsubstance.asp?toxid=25

The 2006 Permit also included TBELs for each individual Group II PAH compound as listed below at 10 µg/L for Outfall 001, and 20 µg/L for naphthalene at Outfall 002:

- Acenaphthene
- Acenaphthylene
- Anthracene
- Benzo(g,h,i)perylene
- Fluoranthene
- Fluorene
- Naphthalene (analytical method requirements also established)
- Phenanthrene
- Pyrene

The 2006 Permit also included limits for the sum of Group I and II PAHs as listed above at 50 µg/L for Outfall 001, and 10 µg/L for the sum of Group I PAHs, and 100 µg/L for the sum of Group II PAHs at Outfall 002. From January 1, 2009 through December 31, 2013, for Outfall 001, individual Group I and II PAH compounds were not detected above the laboratory PQLs, with the exception of pyrene, which was detected on one occasion in 2011. Benzo(a)anthracene, benzo(a)pyrene, benzo(b)fluoranthene, benzo(k)fluoranthene, chrysene, dibenzo(a,h)anthracene, acenaphthene, acenaphthylene, anthracene, benzo(g,h,i)perylene, and fluoranthene were not detected above the laboratory PQLs at Outfall 002 during this period. Indeno(1,2,3-c,d)pyrene, fluorene, naphthalene, and pyrene were each detected on one occasion during this period. Phenanthrene was detected on five occasions during this period.

Similar to the data usability issues identified for BTEX, in determining reasonable potential for concentrations of PAHs in the effluent to cause or contribute to an excursion above WQC, EPA was unable to use the 95th and 99th percentile projected effluent concentrations given the insufficiency of the effluent data for the previous five years (i.e., a high proportion of non-detect values) for Outfalls 001 and 002. As noted above, the PQL for analysis was typically two to five times the WQC for Group I PAHs. These non-detect data are not representative of concentrations of PAHs in the effluent when calculating reasonable potential, since PAHs may be present above the WQC but below the PQL. EPA cannot assume PAHs are not present above WQC where a sample is non-detect but the PQL is insufficient.

Therefore, EPA also followed guidance in the TSD for determining whether a pollutant has reasonable potential to cause or contribute to an excursion above WQC using a variety of factors and information in accordance with 40 CFR §122.44(d)(1)(ii). Based on the impairment and cause of impairment in the Chelsea River, the type of petroleum products stored at the Terminal that contain PAHs, the historical levels of PAHs that have been documented in effluent, soil and/or groundwater at the Terminal and in the Chelsea River, the potential health concerns associated with PAHs, and absent an approved mixing zone in accordance with 314 CMR 4.03(2), the effluent has a reasonable potential to cause or contribute to an excursion above WQC with respect to PAHs. A limit is required for the protection of human health (i.e., primary and secondary contact) and to meet water quality

standards established under Section 303 of the CWA as well as Massachusetts' WQSs (e.g., 314 CMR 4.05(5)(e)).

Further, EPA has selected to limit one Group I PAH, benzo(a)pyrene and one Group II PAH, naphthalene, as the indicator parameters for PAHs at Outfall 001 and 002. While the distillation process removes a greater proportion of Group I PAHs by weight, these compounds can still be present in low concentrations, particularly benzo(a)pyrene. Benzo(a)pyrene has been used extensively as a model carcinogen and as a positive control in a variety of risk assessment tests. EPA has designated this compound as a known animal carcinogen and probable human carcinogen. Relative to the other Group I PAHs, it is strongly carcinogenic. Of Group II PAHs, naphthalene, like benzo(a)pyrene poses high calculable risk relative to other PAHs. It is included as a priority pollutant under the CWA and is classified as a possible human carcinogen. In middle and heavy distillates, naphthalene is one of the most commonly found compounds, present in diesel fuel and No. 2 fuel oil at up to approximately 0.8 and 0.4 percent by weight, respectively.[20] Naphthalene is only slightly soluble in water, but is highly soluble in benzene and other solvents.

Therefore, the Draft Permit establishes an effluent limit of 0.018 µg/L for benzo(a)pyrene and maintains the limit of 10 µg/L for naphthalene at Outfall 001 to ensure compliance with Massachusetts WQSs. The limit for benzo(a)pyrene is based on the "organism only" human health WQC, selected because of the uses designated for Class SB waters. The limit is expressed in the Draft Permit as a monthly average limit, established in accordance with recommendations in EPA's TSD, given the exposure expected over a lifetime. The Draft Permit requires monitoring, without limits for the daily maximum concentrations. Naphthalene does not currently have applicable aquatic life or human health WQC. Furthermore, the TBEL for naphthalene included in the 2006 Permit, 10 µg/L, is more stringent than EPA's lifetime health advisory value for naphthalene, 100 µg/L. This TBEL is based on the ML for analysis of naphthalene as established in the 1990 Permit and is continued to meet anti-backsliding requirements. The limit is expressed as a daily maximum limit.

The 2006 Permit established TBELs for individual Group I PAHs at the ML for analysis of each compound, 10 µg/L for the sum of Group I PAHs, 100 µg/L for the sum of Group II PAHs, and 20 µg/L for naphthalene. EPA has corrected limitations for individual Group I PAHs at Outfall 002 to be consistent with the technology basis in EPA's RGP, since groundwater remediation effluent is discharged via an internal outfall, rather than to the receiving water. In the Fact Sheet for EPA's RGP, EPA noted that based on review of data for remediation sites in New England, with proper treatment, PAH compounds could be removed to laboratory minimum levels. Based on the ML for individual Group I PAH compounds included in Appendix VI of EPA's RGP, the appropriate TBEL is 0.1 µg/L for each individual Group I PAH compound. In addition, because the Draft Permit establishes a more stringent WQBEL for the Group I indicator parameter and maintains the TBEL for the Group II indicator parameter at Outfall 001, additional limits for PAHs at Outfall 001 are not included. The WQBEL for the indicator Group I PAH at Outfall 001 is consistent with Appendix III of EPA's RGP, Sub-Category B – Fuel Oil and Other Oils and Sub-Category C – Hydrostatic Testing of Pipelines and Tanks.

[20] See Agency for Toxic Substances and Disease Registry Toxic Substances Portal entries for naphthalene at http://www.atsdr.cdc.gov/toxprofiles/tp.asp?id=240&tid=43

Through implementation of the BAT/BCT for stormwater associated with industrial activity, the SWPPP, and with proper operation and maintenance of the Terminal's treatment systems, concentrations of benzo(a)pyrene and naphthalene in discharges from the Terminal are expected to consistently meet the effluent limitations. The establishment of PAH limits ensures compliance with Massachusetts WQSs. Compliance with these limits for the indicator PAHs for Group I and Group II PAHs at Outfalls 001 and 002 will demonstrate compliance with Massachusetts' WQSs for all PAHs.

To confirm that the use of benzo(a)pyrene and naphthalene as indicator parameters for PAHs is sufficient to meet WQSs, and to better quantify the variability of the pollutants in the effluent, the Draft Permit has increased the frequency of monitoring for these pollutants to monthly. To further support the use of benzo(a)pyrene and naphthalene as the indicator parameters, the Draft Permit also includes monitoring for the seven Group I PAHs and nine Group II PAHs (listed above) once per year for both the effluent and the receiving water for both outfalls. Should monitoring data indicate the persistence of PAHs in concentrations that may cause or contribute to an excursion above water quality criteria, the permit may be modified, reissued or revoked pursuant to 40 CFR §122.62. In the event monitoring data indicate benzo(a)pyrene and/or naphthalene are insufficient as indicator parameters for PAHs, the Draft Permit includes a reopener clause, as required, in Part I.E.

The human health criteria for benzo(a)pyrene as expressed in nanograms per liter, is many times lower than the current PQLs for determining PAH concentrations in aqueous solutions. Where effluent limits have been established in NPDES permits but compliance cannot be determined using currently approved analytical methods (e.g. if WQBELs are less than the analytical capability of the methods), EPA has considered establishing National Quantitation Limits (NQLs) under 40 CFR §136. In the absence of NQLs, EPA's Federal Advisory Committee on Detection and Quantitation report[21] recommends setting compliance limits at the lowest concentration possible using approved analytical methods. This report further recommends permits contain a condition that the PQL be at or below the ML and that permits should further specify reporting requirements for results below the ML, or above the PQL but below the ML, typically noted on a laboratory report as an "estimated value".

Therefore, the Draft Permit requires that the quantitative methodology used for PAH analysis must achieve the ML of ≤0.1 µg/L for each Group I PAH compound and ≤5 µg/L for each Group II PAH compound. The MLs will serve as the compliance level for benzo(a)pyrene for Outfall 001 and benzo(a)pyrene and naphthalene for Outfall 002. These MLs are based on those listed in Appendix VI of EPA's Remediation General Permit and similar facilities in the region. This approach is also consistent with EPA's TSD, page 111, which recommends, "the compliance level be defined in the permit as the minimum level (ML)." The Permittee may use any approved analytical method in CFR §136 for which the PQL is at or below the ML. As described in 7.3.1 above, MassDEP's VPH and/or EPH methods may not be used for sampling required in the Draft Permit.

Naphthalene is commonly measured using test methods for both VOCs and semi-volatile organic compounds (SVOCs). Therefore, the Draft Permit also maintains the requirement that naphthalene be monitored using both SVOC and VOC analytical methods. The other 15 priority pollutant PAHs are

[21] *Report of the Federal Advisory Committee on Detection and Quantitation Approaches and Uses in Clean Water Act Programs*. EPA Office of Science and Technology Final Report: December 2007, 176 p.

only analyzed using SVOC methods. Any non-detect or estimated results for an individual compound should be reported according to the latest EPA Region 1 *NPDES Permit Program Instructions for the Discharge Monitoring Report Forms (DMRs)*. The Permittee is also required to report the PQL for analysis for each compound using a data qualifier in the instance an analyte is not detected above the PQL. These values may be reduced by modification pursuant to 40 CFR §122.62 as more sensitive tests become available or are approved by EPA and MassDEP.

7.3.3 Total Petroleum Hydrocarbons

O&G has been the primary petroleum related parameter used in many of EPA's individual NPDES permits and is a common parameter in many of EPA's promulgated industrial effluent guidelines. A total O&G analysis includes petroleum-related O&G but may also capture other non-petroleum fats and greases in the result. Similarly, due to the sheer number of chemicals contained in refined petroleum products, measurement of all of the component chemicals is not practical, cost effective, or needed for adequate attainment of water quality standards. TPH measures the total concentration of all petroleum related hydrocarbon within a specified carbon range and is often applied to wastewater generated during remediation activities. The petroleum related hydrocarbons included within this analysis range from compounds with six carbon atoms (C_6) to compounds with 25 carbon atoms (C_{25}). The use of TPH testing is a common approach implemented by regulatory agencies in the United States to establish target cleanup levels for contaminated soil or water.[22] An aggregate measurement of the hydrocarbon compounds can also serve as an indicator of overall relative pollutant concentration and as an indicator for assessing water quality impacts.

Therefore, the hydrocarbon fraction of the O&G parameter, or TPH, was included in the 2006 Permit with a maximum daily limit of 5 mg/l at Outfall 002. EPA established this TBEL using BPJ based upon performance information for the type of treatment the Terminal applies to discharges of groundwater. From January 1, 2009 through December 31, 2013, TPH was not detected above the laboratory PQLs (ranging from 3.62 to 4.92 mg/L or 3.62 to 4.92 parts per million). However, EPA reviewed the Massachusetts Waste Site/Reportable Releases Lookup[23] for the Terminal to determine if continuing sources of TPH are present in soil or groundwater. RTN listings indicate that six reportable conditions have been reported since the 2006 Permit was issued. One of these conditions was elevated concentrations of TPH in soil.

The hydrocarbon makeup in the environment can change after the product has been released through leaks, spills, or other releases due to processes including volatilization, biodegradation, and sorption. This process occurs over a period of many years in soil and groundwater, sometimes referred to as "weathering". Based on the recent indication of TPH in soil, which may come into contact with groundwater and/or stormwater at the Terminal, the Draft Permit maintains the maximum daily limit of 5 mg/l at Outfall 002. The Permittee is required to monitor monthly. Individual analytes of TPH, such as BTEX and PAHs, which are also parameters in the Draft Permit, provide additional chemical specific controls on the discharge.

---

[22] See Weisman, W. (1998) *Analysis of Petroleum Hydrocarbons in Environmental Media* . Total Petroleum Hydrocarbons Criteria Working Group Series. Volume 1.
[23] Chapter 21e searchable database available at http://public.dep.state.ma.us/SearchableSites2/Search.aspx

There are several EPA approved methods (and modifications allowed) which may be used to quantify TPH such as Modified Method 8100 and Method 1664. EPA Method 1664 replaced EPA Method 418.1 to eliminate the use of Freon. As described in 7.3.1 above, MassDEP's VPH and/or EPH methods may not be used for sampling required in the Draft Permit.

7.3.4 Cyanide

Compounds containing the cyanide group (CN) are used and readily formed in many industrial processes and can be found in a variety of effluents, such as those from coal, steel, petroleum, plastics, synthetic fibers, metal plating, and chemical industries. Cyanide occurs in water in many forms, including: hydrogen cyanide (HCN), the cyanide ion (CN^-), simple cyanides, metallocyanide complexes, and as organic compounds. Both HCN and CN^- are toxic to aquatic life. Since CN^- readily converts to HCN at pH values that commonly exist in surface waters (i.e., less than 7.0 SU), the majority of cyanide consists of the more toxic HCN. EPA's cyanide criteria are stated in terms of free cyanide, defined as the sum of the cyanide present as HCN and CN^-. The relative concentrations of these forms depend mainly on pH and temperature. Currently, EPA approved analytical methods are available for total cyanide and available cyanide in water. Total cyanide includes all the forms of cyanide. Available cyanide includes free cyanide plus those cyanide species that can readily disassociate to release free cyanide.

The 2006 Permit included a monitoring requirement for cyanide at Outfall 002 given concentrations historically measured in groundwater. EPA reviewed all appropriate criteria including the most recent *National Recommended Water Quality Criteria*, and monthly monitoring results for cyanide in the groundwater remediation effluent discharged via Outfall 002. Similar to the data usability issues identified for BTEX and PAHs, in determining reasonable potential for concentrations of cyanide in the effluent to cause or contribute to an excursion above WQC, EPA was unable to use the 95th and 99th percentile projected effluent concentrations given the insufficiency of the effluent data for the previous five years (i.e., a high proportion of non-detect values, detect values flagged as estimated values and a PQL above the applicable criteria). Monitoring for cyanide at Outfall 002 is continued in the Draft Permit given the persistence of cyanide in groundwater, occasionally at concentrations above the acute and chronic criteria for saltwater, 1 µg/L.

The Draft Permit has also added a requirement for total cyanide in the pollutant scan (see below) because of the persistence of cyanide in groundwater remediation effluent, the toxicity of cyanide compounds, and to determine if cyanide is discharged to the Chelsea River via Outfall 001 in concentrations that could cause or contribute to an excursion above WQC. Should monitoring data indicate cyanide in concentrations that may cause or contribute to an excursion above water quality criteria, the permit may be modified, reissued or revoked pursuant to 40 CFR §122.62.

7.3.5 Lead

Many types of metals occur in ground and surface waters around New England. Certain metals like copper, lead, and zinc can be toxic to aquatic life, and may bioaccumulate in plants and animal species. Properly designed and operated treatment units, including ion exchange, gravity settling, carbon adsorption, and chemical sequestration, can routinely reduce metals concentrations below even the most conservative WQC. In fact, many metals have similar physical or chemical characteristics that are important in evaluating the appropriate control or removal technologies for

contamination. Sources of metals in discharges from the Terminal may include petroleum products, which contain *de minimis* quantities of metals by weight, depending upon the type of fuel. Additional sources potentially include the municipal water supply, process piping, and historical releases.

The 2006 Permit included monitoring for a limited number of metals twice per year at Outfall 001 as part of the WET testing. Of the metals tested during WET testing, only lead has been detected above the laboratory PQLs since Sunoco assumed operations at the Terminal in 2011. These concentrations of lead have been below the acute and chronic WQC for saltwater, 210 µg/L and 8.1 µg/L, respectively. EPA reviewed the Massachusetts Waste Site/Reportable Releases Lookup for the Terminal to determine possible sources of lead. RTN listings indicate that one of the reportable conditions documented at the Terminal since 2006 was related to elevated concentrations of lead in soil.

As described above, EPA typically completes a reasonable potential analysis to determine if concentrations of a pollutant such as lead may cause or contribute to an excursion above WQC. EPA does not have sufficient data to complete this analysis for lead. In addition, EPA does not have recent data regarding the median concentrations of these metals in the receiving water to account for the available assimilative capacity of the Chelsea River, if any. Given the limited representative data and the documented presence of lead in soil at the Terminal, the Draft Permit has increased the frequency of monitoring for total recoverable lead at Outfall 001 from twice per year to monthly. The Draft Permit specifies that samples analyzed in conjunction with WET testing may be used to satisfy requirements for the month in which WET testing is required. Should monitoring data indicate lead in concentrations that may cause or contribute to an excursion above water quality criteria, the permit may be modified, reissued or revoked pursuant to 40 CFR §122.62.

7.3.6 Oxygenates

Many chemical compounds have been added to petroleum fuels to enhance their performance. Due to the phase-out of leaded gasoline in the early 1980's, several alcohols and ethers began to replace tetraethyl lead as an anti-knock and octane boosting additive. Since 1992, higher concentrations of gasoline “oxygenates,” such as MtBE and EtOH have been used to improve the combustion of fuel in certain air pollution “non-attainment” areas of the country including New England.

<u>MtBE</u>

MtBE is a synthetic compound used as a replacement for lead containing compounds in fuels. MtBE was typically added in concentrations less than 1 percent by volume in regular gasoline, and 2-9 percent by volume in premium gasoline. When the 1990 Clean Air Act requirements for cleaner burning fuels took effect (which required additional oxygen content), MtBE concentrations increased to 11-15% by volume. Due to its small molecular size and solubility in water, MtBE moves rapidly into the groundwater, faster than many other constituents of gasoline. Because of these physical properties, MtBE has been detected in significant concentrations in groundwater due to tank leaks or other releases of petroleum fuels.

Although MtBE is no longer used at the Terminal, MtBE blended gasoline was stored on site until EtOH came into use. Historic groundwater samples from monitoring wells on the property as well as influent (groundwater prior to treatment in the groundwater treatment system) indicated up to 6,220

µg/L of MtBE. As a result, the 2006 Permit included technology-based effluent limit for MtBE at Outfall 002 of 70 µg/L. This limit was based on using granular activated carbon and a properly designed and maintained treatment system, consistent with the cleanup standard for groundwater in Massachusetts (GW-1 under the state MCP). From January 1, 2009 through December 31, 2013, concentrations ranged from below the PQL to 21.3 µg/L. Concentrations of MtBE have not been measured following treatment in the stormwater treatment system.

In reviewing appropriate criteria for MtBE, EPA noted that this compound is not currently listed as a priority pollutant by EPA and as such has neither aquatic nor human health standards developed under EPA's water quality programs. However, EPA has issued lifetime health advisories for MtBE in drinking water based primarily on taste and odor thresholds, also considered protective of human health. An advisory from 1996 established an MtBE concentration level of 70 µg/L water as a threshold value for taste and odor. The current advisory establishes a concentration of 20 to 40 µg/L of MtBE since MtBE has an odor threshold at 20 µg/L, and a taste threshold at 40 µg/L.

To meet Massachusetts' narrative criteria found at 314 CMR 4.05(4)(b) for Outfall 001, the Draft Permit prohibits discharges that impart taste and odor, among other properties, which would cause the receiving water to be unsuitable for its designated uses. Because MtBE has not been monitored at Outfall 001, it is not known if discharges of MtBE have reasonable potential to cause or contribute to an excursion above WQC in the event MtBE is discharged via Outfall 001 at concentrations measured at Outfall 002. Therefore, the Draft Permit establishes monitoring for MtBE, without limits, for the daily maximum concentration at Outfall 001. Further, EPA's RGP reduced the effluent limitation for MtBE based on monitoring reports from gasoline remediation sites, which demonstrated that by using best available treatment (e.g. air stripping and/or carbon) a limit of 20 µg/L is feasible. Therefore, the TBEL for MtBE at Outfall 002 has been reduced to 20 µg/L, consistent with Appendix III, Category I, Subcategory A – Gasoline-Only Sites of EPA's RGP. Should monitoring data indicate MtBE in concentrations that may cause or contribute to an excursion above water quality criteria, the permit may be modified, reissued or revoked pursuant to 40 CFR §122.62.

<u>EtOH</u>

EtOH is a fuel oxygenate additive blended with gasoline to replace the more toxic additive MtBE and has been stored at the Terminal since April 2006. The use of EtOH as a fuel additive could lead to exposures from water that has been contaminated with ethanol from leaking storage facilities or accidental spills. EtOH is a clear, colorless liquid, miscible with water and many organic solvents. When released into surface water, it will volatilize or biodegrade rapidly and is not expected to adsorb to sediment or bioaccumulate in fish. However, large releases of ethanol may deplete dissolved oxygen concentrations resulting in levels unable to support aquatic life. EtOH in groundwater will degrade more slowly, particularly under conditions where microbial activity and oxygen levels in soil have already been impacted by releases of petroleum hydrocarbons. EtOH is known to slow the degradation in BTEX groundwater plumes, which can potentially result in higher concentrations of BTEX retained for longer periods or a plume size of longer distance from the origin point.

EPA has not promulgated ELGs for EtOH at petroleum storage facilities although ELGs exist for EtOH as a non-conventional pollutant in the pharmaceutical manufacturing point source category (40 CFR §439). EPA has also not established human health or aquatic life WQC for EtOH. EtOH has relatively low toxicity (e.g., EtOH is not a toxic priority pollutant and ecotoxicity information available in Material Safety Data Sheets indicate lethal effects to aquatic life occur at concentrations between approximately 11,000 mg/L to 34,000 mg/L). From January 1, 2009 through December 31, 2013, EtOH was not detected above the laboratory PQLs. Given the short residence time expected in the environment and a lack of practical technologies to remove EtOH from stormwater, EPA is not applying numeric effluent limitations in the Draft Permit. However, EPA has continued to include technology-based BMPs in the SWPPP, such as spill control BMPs, to address the potential discharge of ethanol and petroleum-related pollutants. As previously stated, no WQC have been developed or approved by EPA.

However, EPA reviewed the available benchmark monitoring levels for EtOH in determining the monitoring requirements for EtOH. The New England Interstate Water Pollution Control Commission utilized guidance included in EPA's *Final Water Quality Guidance for the Great Lakes System* (1995), referred to as Tier II procedures, to calculate conservative water quality benchmark concentrations for EtOH in the absence of sufficient data to derive WQC.[24] These represent the concentrations at which EtOH would be expected to deplete dissolved oxygen levels below those necessary to sustain aquatic life or cause acute and chronic effects, conditions would violate Massachusetts WQSs. These levels are 13 mg/L for depletion of in stream dissolved oxygen in a large river (most conservative), and 564 mg/L and 63 mg/L for acute and chronic effect concentrations, respectively. To continue evaluation of the effects from long term use of EtOH as a fuel additive, and to ensure EtOH is not entrained to the Chelsea River from the Terminal, the Draft Permit establishes quarterly monitoring of EtOH and specifies that the PQL for analysis of EtOH achieve 0.4 mg/L. The Draft Permit also includes a non-numeric technology-based limitation specific to EtOH in the Terminal's SWPPP requirement.

7.4 Pollutant Scan

The industrial property on which the Sunoco Terminal operates has been utilized for industrial fuel storage since the late 1800's. Historical impacts related to operations at the Terminal site have been documented and addressed by the MCP since at least 1991. The effluent contains a small volume of groundwater remediation effluent. In addition, stormwater at the Terminal has the potential to come into contact with materials stored at the Terminal or contamination in soil or groundwater from activities that took place at the Terminal historically or continue to take place currently. The Terminal also periodically discharges hydrostatic test water.

In EPA's evaluation of historical releases at the Terminal, RTN listings indicate that that at least 15 reportable conditions have been documented at the Terminal since 1996, six of which have occurred since the 2006 Permit was issued. These reportable conditions have been related to gasoline, jet fuel, #6 fuel oil and elevated concentrations of PAHs, TPH and lead in soil. Documentation required for a portion of the remediation occurring at the Terminal further indicates the presence of waste oil in soil

[24] New England Interstate Water Pollution Control Commission, *Health, Environmental, and Economic Impacts of Adding Ethanol to Gasoline in the Northeast States, Volume 3, Water Resources and Associated Health Impacts*. July 2001, 129 pp.

and/or groundwater. Many of the pollutants associated with the releases of these fuels are listed as priority pollutants in Appendix A to 40 CFR §423 or are non-conventional pollutants that have not otherwise been addressed in the Draft Permit.

Section 308 of the CWA allows EPA to require the Permittee to report information necessary for the establishment of appropriate permit limits and conditions or monitoring requirements. To protect the Chelsea River and the integrity of the stormwater, the Draft Permit includes the requirement to conduct annual sampling at Outfall 001 for a portion of the 126 EPA Priority Pollutants and selected non-conventional pollutants related to impairments in the Chelsea River, as listed below.

- BTEX: benzene, toluene, ethylbenzene, total xylenes
- Group I PAHs: benzo(a)anthracene, benzo(a)pyrene, benzo(b)fluoranthene, benzo(k)fluoranthene, chrysene, dibenzo(a,h)anthracene, indeno(1,2,3-cd)pyrene
- Group II PAHs: acenaphthene, acenaphthylene, anthracene, benzo(g,h,i)perylene, fluoranthene, fluorene, naphthalene, phenanthrene, pyrene
- Chromium
- Iron
- Cyanide
- Phenol
- tert-butyl alcohol
- Ammonia
- Fecal coliform

In addition, the Draft Permit requires testing for BTEX, Group I PAHs and Group II PAHs as listed above for the receiving water once per year. The effluent and ambient testing of petroleum hydrocarbons is further required to confirm that the effluent meets WQSs through limitation of an indicator pollutant in accordance with 40 CFR §122.44(d)(1)(vi)(C).

These pollutants were selected on a site-specific basis, given the types of discharges at the Terminal, impairments in the Chelsea River, and pollutants that have the potential to comingle with effluent directly or through contact with contaminated groundwater or soil given the operational and/or release history. The partial list of pollutants is derived primarily from requirements for these pollutants described in EPA's ELG Document, which lists pollutants typically found at similar facilities in similar types of discharges, which are limited or monitored by regulatory agencies throughout the United States (e.g., phenol). EPA also reviewed Category IV of Appendix III of the RGP, Sub-Category C – Hydrostatic Testing of Pipelines and Tanks, and additional monitoring requirements in EPA's MSGP for discharges to an impaired water.

The Draft Permit contains limitations or requirements for certain pollutants noted above, namely, BTEX, PAHs, and cyanide as described in Sections 7.3.1, 7.3.2, and 7.3.4, respectively. Monitoring results from the testing of these parameters where required at least annually in the Draft Permit, can be used to satisfy the requirements for the annual pollutant scan, as long as the timing of sampling coincides with the sampling for other parameters of the pollutant scan. The other parameters, chromium, iron, tert-butyl alcohol, phenol, ammonia, and fecal coliform, are further described below.

The permit may be reopened to include chemical specific limitations for any of the pollutants described if the sampling data demonstrates that the effluent has a reasonable potential to cause or contribute to an excursion above State Water Quality Standards (see 40 CFR §122.44(d)(1)(iii)).

7.4.1 Chromium

The Draft Permit requires the Permittee test for a limited number of metals once per year at Outfall 001 as part of the WET testing requirements (see below). The list of metals required for WET testing was revised pursuant to a new testing protocol in 2012 such that testing for chromium was removed.

In many instances, metals like chromium build up to toxic concentrations through small releases that occur repeatedly over time, resulting in industrial contamination. Chromium has been found in groundwater at remediation and construction de-watering sites in Region 1, particularly in urban areas that have had long histories of industrial and municipal activity. While chromium is actually required by the human body in small amounts, it can also be toxic in larger doses. Water organisms are often more sensitive than humans to metals. Because monitoring data are not available for chromium for discharges from the Terminal, EPA has included monitoring requirements to ensure the metal is not present in quantities that could cause or contribute to an excursion above WQC. The Draft Permit requires that total recoverable chromium be analyzed. EPA is required by 40 CFR Section 122.45(c) to express NPDES permit limitations as "total recoverable metal". See EPA's *National Recommended Water Quality Criteria* (822-R-02-047), November 2002, for applicable conversion factors.

7.4.2 Iron

Given the impairment in the Chelsea River for turbidity and taste and odor, EPA considered metals known to cause an organoleptic effect (i.e., taste and odor), which are potentially present at the Terminal, but are not currently monitored. Of those metals listed in EPA's *National Recommended Water Quality Criteria*, EPA has noted high levels of naturally occurring iron in groundwater in New England, such as that discharged from Outfall 002. Iron in groundwater (ferrous Fe^{+2}) will oxidize to insoluble ferric hydroxide (Fe^{+3}) upon mixing and exposure to air. As Fe^{+3}, it can foul treatment systems, cause growth of iron bacteria in systems, and may discolor the effluent or cause localized sediment deposits in stormwater conveyance infrastructure or the receiving waters. Excessive amounts may cause or contribute to violations of WQSs including those related to color, turbidity, solids, and odor, as well as fouling of the discharge treatment systems. These situations denote reasonable potential to violate WQS. Therefore, the Draft Permit has included iron in the pollutant scan at Outfall 001, to determine if iron is present in quantities that could violate WQSs.

7.4.3 Phenol

Phenol and phenolic compounds are widely used chemical intermediates and occur in the environment as a result of manufacturing, use of products containing phenols, from combustion sources, coal gas, and natural decay of organic matter. Phenol may also be present in *de minimis* quantities in gasoline, diesel and kerosene. Phenol and a number of other compounds including nitro-phenols and chlorinated phenols are listed as priority pollutants that have been evaluated for the establishment of water quality criteria. Phenol and a number of other phenolic compounds are

included in EPA's WQC as having organoleptic (i.e., taste and odor) effects in water at low levels. The threshold at which phenol has an effect on taste and odor in water is 300 µg/L.

The occurrence of phenol or phenol compounds is generally infrequent in discharges, possibly due to rapid biodegradation of phenol in the environment. However, due to its wide use, distribution in the environment, the types of materials stored at the Terminal, and its potential effect on taste and odor and turbidity in the Chelsea River, total phenol has been included in the requirement for the pollutant scan to ensure the pollutant is not present in quantities that could cause or contribute to an excursion above WQC.

7.4.4 tert-Butyl Alcohol

Similar to MtBE and ethanol, tert-butyl alcohol (TBA) is an oxygenate compound that has been added to petroleum fuels to enhance their performance. TBA, which can be present as both a fuel additive and as a breakdown product of MtBE in the environment, is essentially miscible in water, has a much lower Henry's law constant (10^{-5}) and a low Koc value. As a result, TBA is expected to be even more difficult than MtBE to control to low concentrations.

TBA is not monitored at the Terminal. However, monitoring data available for the Chelsea River indicate TBA has been detected in surface water. Massachusetts established an Action Level of 1,000 µg/L for TBA and monitoring for the compound is required for certain sites under EPA's RGP. Therefore, TBA has been included in the requirement for the pollutant scan for Outfall 001 to ensure the pollutant is not present in quantities that could cause or contribute to an excursion above WQC. The Draft Permit specifies an ML for analysis.

7.4.5 Ammonia

As described above, the Chelsea River is impaired and requires a TMDL for ammonia (un-ionized). EPA's recommended criteria for ammonia in saltwater are based on temperature, pH and salinity in the receiving water. Information available through the Massachusetts Water Resources Authority's monitoring program for sampling location 027, located near the Terminal on Chelsea River[25] indicates that from 1989 to 2011, the surface water temperature in the Chelsea River has ranged from 1.41°C to 23.6 °C, the pH has ranged from 4.51 SU to 9.5 SU and the salinity has ranged from 0.6 grams per kilogram (g/kg) (or parts per thousand (ppt)) to 33.02 g/kg(ppt). EPA utilized the median values for temperature, pH and salinity for determination of applicable criteria, 15°C, 7.8 SU and 30 g/kg (ppt), respectively.

According to the 1989 *Ambient Aquatic Life Water Quality Criteria for Ammonia (Saltwater[26])*, when the receiving water temperature is 15°C (59°F), the pH of the receiving water is 7.8 SU and the receiving water salinity is 30 g/kg, the recommended acute criterion value is 16 mg/L and the recommended chronic criterion value is 2.4 mg/L. The Permittee monitors for ammonia, as N, twice per year in conjunction with Whole Effluent Toxicity (WET) testing. Limited data available from January 1, 2009 through December 31, 2013 indicates that ammonia is present in the discharge at concentrations below these criteria, ranging from 0.13 mg/L to 2.5 mg/L.

---

[25] Massachusetts Water Resources Authority Water Quality Monitoring Program Water Quality Data available at: http://www.mwra.state.ma.us/harbor/html/wq_data.htm

[26] http://water.epa.gov/scitech/swguidance/standards/upload/2001_10_12_criteria_ambientwqc_ammoniasalt1989.pdf

Based on the types of discharges at the Terminal, the presence of ammonia in the effluent and the impairment for ammonia in the Chelsea River, the Draft Permit includes a requirement for ammonia in the pollutant scan for Outfall 001 to ensure ammonia is not present in discharges from the Terminal at concentrations that could cause or contribute to an excursion above WQC.

7.4.6 Fecal coliform

While the Terminal does not engage in activities that would be expected to generate large sources of bacteria, stormwater runoff can readily transport bacteria from surfaces susceptible to the waste products of warm-blooded animals or pathogens, which attach to organic and inorganic particles. Many bacteria can survive in freshwater and saltwater environments, posing health risk to humans fish/shellfish, and water quality. As described above, the Chelsea River is listed in the Massachusetts Year 2012 Integrated List of Waters as impaired for its designated uses and fecal coliform is listed as a pollutant requiring a TMDL. The Massachusetts WQSs at 314 CMR 4.05(4)(b)4 limit fecal coliform in Class SB waters designated for shellfishing. EPA does not currently have information regarding bacteria in discharges from the Terminal. Therefore, the Draft Permit includes a requirement for fecal coliform in the pollutant scan for Outfall 001 to ensure bacteria are not present in discharges from the Terminal at concentrations that could cause or contribute to an excursion above WQSs. Inclusion of monitoring for a pollutant for which the receiving water is impaired is consistent with EPA's MSGP.

7.5 Whole Effluent Toxicity

Sections 402(a)(2) and 308(a) of the CWA provide EPA and States with the authority to require toxicity testing. Section 308 specifically describes biological monitoring methods as techniques that may be used to carry out objectives of the CWA. Under certain State narrative WQSs, and Sections 301, 303 and 402 of the CWA, EPA and the States may establish toxicity-based limits to implement the narrative "no toxics in toxic amounts". Massachusetts has narrative criteria in their water quality regulations (see Massachusetts 314 CMR 4.05(5)(e)) that prohibit toxic discharges in toxic amounts. The Draft Permit prohibits the addition of toxic materials or chemicals to the discharges and prohibits the discharge of pollutants in amounts that would be toxic to aquatic life.

To meet Massachusetts' narrative criteria found at 314 CMR 4.05(5)(e), the Draft Permit prohibits the discharge of pollutants in amounts that would be toxic to aquatic life. WET testing is conducted to determine whether certain effluents, often containing potentially toxic pollutants, are discharged in a combination that produces a toxic amount of pollutants in the receiving water. Therefore, toxicity testing is used in conjunction with pollutant-specific control procedures to minimize the discharge of toxic pollutants.

The regulations at 40 CFR §122.44(d)(ii) state, "*When determining whether a discharge causes, has the reasonable potential to cause, or contributes to an in-stream excursion above a narrative or numeric criteria within a State water quality standard, the permitting authority shall use procedures which account for existing controls on point and non-point sources of pollution...(including) the sensitivity of the species to toxicity testing...*" MassDEP in its "Implementation Policy for the Control of Toxic Pollutants in Surface Waters" (February 23, 1990) ("Toxics Policy") sets forth toxicity limits according to dilution factors based on perceived risk.

The 2006 Permit required toxicity testing conducted twice per year for one species with an acute toxicity limit of LC_{50} of 50% or greater. The Permittee continued to use alternate dilution water during the permit term. From 2008 to 2013, all WET test results for LC_{50} were greater than 100%. Therefore, that there is no reasonable potential to cause or contribute to an excursion above WQC. Based on the impairment to aquatic life in the Chelsea River, and given the potential for the additive and/or synergistic effect of several pollutants of concern for discharges from the Terminal, the Draft Permit contains acute testing requirements for **effluent and** chemical analysis requirements for **receiving water** once per year. The Draft Permit requires that testing be conducted for both the Mysid Shrimp (*Americamysis bahia*) and Inland Silverside (*Menidia beryllina*). The requirements included in the Draft Permit are consistent with the Toxics Policy for dilution in the low risk category except that the frequency of testing normally required in the Toxics Policy has been reduced because toxicity tests to date have consistently indicated no toxicity and the discharge is intermittent, consisting of almost entirely stormwater runoff, and the level of treatment applied to the effluent is beyond standard industry practice (i.e., media and carbon filtration). The number of species has been increased because the discharge contains groundwater remediation effluent.

The Permittee must collect the required receiving water sample (i.e., diluent) from the Chelsea River and/or Sales Creek at a point immediately outside of the permitted discharge's zone of influence at a reasonably accessible location. A receiving water control (0% effluent) must be tested once per year for the chemical parameters in Attachment A, Marine Acute Toxicity Test Procedure and Protocol (July 2012). If toxicity is indicated, the Permittee is allowed use of alternate dilution water in accordance with the provisions in the Draft Permit. To clarify the requirements for effluent and receiving water for this testing, EPA has included WET parameters on the DMRs. Results of these toxicity tests will demonstrate compliance with the Massachusetts WQSs.

7.6 Hydrostatic Testing

The tanks and/or pipe networks used for the storage and conveyance of petroleum products at the Terminal sometimes require maintenance or repair. To ensure safe working conditions during this maintenance work, storage tanks and/or pipe networks are rigorously cleaned (e.g., "Poly Brushed", "Squeegee Pigged") and certified as being product-free. After completing maintenance work, the vessels and/or pipe networks may be hydrostatically tested for leaks. Hydrostatic testing involves filling the vessel or pipe with fluid under pressure and monitoring pressure drops over time. If the system maintains a constant pressure, there are no leaks. River water or potable water may be used as a source of hydrostatic test water. Thus, hydrostatic test water discharge may contain minimal amounts of foreign matter, trace amounts of hydrocarbons, background material found in the river or residual chlorine.
As a precaution, the Draft Permit requires any hydrostatic test water to be monitored (as further described below) and treated through the stormwater treatment system prior to being discharged to the Chelsea River. In addition, the Draft Permit requires control of the flow of hydrostatic test water to prevent exceeding the maximum design flow rate of 600 GPM.

The Draft Permit requires collection of a minimum of five representative samples of the hydrostatic test water:

For tanks, new or existing, the Draft Permit requires the Permittee to take:

- one grab sample of the influent (one grab sample of the fill water during the first 10% of the estimated fill segment time (source at intake));
- one grab sample of the tank water (at the effluent point of the tank), following testing but before draining (in-process);
- two grab samples of the effluent (one sample of the discharge water during the first 10% of discharge and one sample during the last 10% of discharge) before treatment through the stormwater treatment system; and
- one grab sample of the effluent (one sample of the discharge water during the first 10% of discharge) following treatment through the stormwater treatment system through Outfall 001.

For pipelines, new or existing the Draft Permit requires the Permittee to take:

- one grab sample of the influent (one grab sample of the fill water during the first 10% of the estimated fill segment time (source at intake));
- one grab sample of the pipeline water following depressurization (in-process);
- two grab samples of the effluent (one sample of the discharge water during the first 10% of discharge and one sample during the last 10% of discharge) before treatment through the stormwater treatment system; and
- one grab sample of the effluent (one sample of the discharge water during the first 10% of discharge) following treatment through the stormwater treatment system through Outfall 001.

All samples are required to be analyzed for the pollutants limited in the Draft Permit for Outfall 001 (e.g., flow rate, TSS, O&G, pH, benzene, benzo(a)pyrene, naphthalene) and the additional parameters noted below, based on requirements for this type of discharge surveyed in EPA's ELG Document and/or included in EPA's RGP, Category IV, Subcategory C – Hydrostatic Testing of Pipelines and Tanks:

- Total Flow;
- Chemical Oxygen Demand (COD);
- Dissolved Oxygen (DO);
- Total Surfactants;
- VOCs (Toluene, Ethylbenzene, and Total Xylenes);
- PAHs (listed in Part I.A.2. of the Draft Permit for Pollutant Scan, Effluent, benzo(a)anthracene through pyrene);
- Total Recoverable Metals (iron, chromium, and those listed in Part I.A.2. of the Draft Permit for Whole Effluent Toxicity, cadmium through zinc); and
- Total Residual Chlorine, when potable water or a previously chlorinated source of water is used for hydrostatic testing.

The Draft Permit requires the hydrostatic test waters released from the tank(s) and/or pipelines and treated through the stormwater treatment system meet the effluent limitations and to satisfy all other conditions of the Draft Permit. In addition, the Draft Permit requires the Permittee to routinely observe the surface of the OWS during discharge of hydrostatic test waters, in order to detect any increases in the separated oil layer and to prevent inadvertent release of hydrocarbons to the receiving water. In the event that there is evidence of such a release (e.g., visible oil sheen and/or noticeable

increase in turbidity of discharge water), the Draft Permit requires the Permittee to immediately halt the transfer of hydrostatic test water and take steps to correct the problem.

These requirements are intended to provide adequate characterization of the influent, in-process, and effluent hydrostatic test water and are similar to requirements for similar facilities that discharge hydrostatic test water to Massachusetts receiving waters under EPA's RGP. Sampling of the above parameters is necessary to identify whether there are any residual contaminants present in the hydrostatic test water that might require the permit to be modified or reopened. **Within 90 days of completion of the hydrostatic test**, the Permittee is required to submit a letter or report summarizing the results of such test to EPA and MassDEP at the addresses provided in Part I. E.1. of the Draft Permit. This report shall include the following information:

- the date(s) during which the hydrostatic testing occurred;
- the volume of hydrostatic test water discharged;
- a copy of the laboratory data sheets for each analyses, providing the test method, the detection limits for each analyte, and a brief discussion of whether all appropriate QA/QC procedures were met and were within acceptable limits; and
- a brief discussion of the overall test results and how they relate to the Effluent Limitations in this permit.

All discharges of hydrostatic test water are subject to the numeric and non-numeric effluent limitations in the Draft Permit.

7.7 Tank Bottom and Bilge Water

The bottom of many petroleum product storage tanks may contain a layer of water that has separated from the stored petroleum product due to the density difference between the product and water. As this water coalesces and then settles to the bottom of the tank, compounds including BTEX and PAHs found in the product above it are able to partition and dissolve into the water. The partitioning and dissolution allows the concentrations of some of the more soluble and denser petroleum components to reach toxic levels. Terminal operators drain this layer of water to prevent transfer with the finished product as well as to free up valuable storage space.

Whereas stormwater primarily contacts only those hydrocarbons present at the ground surface and then generally only for short periods of time, tank bottom and bilge water remains in intimate proximity with petroleum derivatives for prolonged periods, allowing toxic pollutants to dissolve into the aqueous phase. EPA considers both tank-bottom and bilge water "process wastewater," since soluble toxic materials can partition from the petroleum product into the water over time. To protect the Chelsea River and Sales Creek from toxic pollutants dissolved in tank-bottom and bilge water, EPA is prohibiting the Permittee from discharging any tank-bottom or bilge water alone or in combination with stormwater or other wastewater unless specifically approved by EPA and MassDEP. Sunoco has indicated that all tank bottom water is consolidated and hauled off-site by (a) licensed waste hauler(s) for treatment and disposal off-site.

7.8 Stormwater Pollution Prevention Plan

On September 25, 1992, EPA promulgated through its General Permit for Stormwater Discharge Associated with Industrial Activity, that the minimum BAT/BCT requirement for stormwater discharges associated with industrial activity is a Stormwater Pollution Prevention Plan (SWPPP) [57 FR, 44438]. EPA has included SWPPP requirements in the Draft Permit because the majority of wastewater discharged from the Terminal consists of stormwater. While the Terminal is ineligible for the MSGP, the Terminal engages in activities that could result in the discharge of pollutants to waters of the United States either directly or indirectly through stormwater runoff. These operations include at least one of the following in an area potentially exposed to precipitation or stormwater: material storage, in-facility transfer, material processing, material handling, or loading and unloading. Specifically, at this Terminal, blending and distribution at the truck loading rack and routine maintenance and cleaning of the stormwater treatment system components, and Tanks 50 and/or 57 are examples of material storage, processing and handling operations that must be included in the SWPPP.

To control activities/operations that could contribute pollutants to waters of the United States and potentially violate Massachusetts WQSs, the Draft Permit requires the Terminal to continue to implement, and maintain a SWPPP. This process involves the following four main steps:

- Forming a team of qualified Terminal personnel who will be responsible for developing and updating the SWPPP and assisting the Terminal manager in its implementation;
- Assessing the potential stormwater pollution sources;
- Selecting and implementing appropriate management practices and controls for these potential pollution sources; and
- Periodically re-evaluating the effectiveness of the SWPPP in preventing stormwater contamination and overall compliance with the various terms and conditions of the Draft Permit.

The goal of the SWPPP is to reduce, or prevent, the discharge of pollutants through the stormwater system. The SWPPP serves to document the selection, design and installation of control measures, including BMPs. Additionally, the SWPPP requirements in the Draft Permit are intended to facilitate a systematic approach for the Permittee to properly operate and maintain all facilities and systems of treatment and control (and related appurtenances) which are installed or used to achieve compliance with the conditions of this permit. The SWPPP shall be prepared in accordance with good engineering practices and identify potential sources of pollutants, which may reasonably be expected to affect the quality of stormwater discharges associated with industrial activity from the Terminal. The SWPPP documents measures implemented at the Terminal to satisfy the non-numeric technology-based effluent limitations included in the Draft Permit. These non-numeric effluent limitations support, and are equally enforceable as, the numeric effluent limitations included in the Draft Permit.

Pursuant to Section 304(a) of the Act and 40 CFR 125.103(b), BMPs may be expressly incorporated into a permit on a case-by-case basis where it is determined they are necessary to carry out the provision of the CWA under Section 402(a)(1). These conditions apply to the Terminal because Sunoco stores and handles products containing pollutants listed as toxic under Section 307(a)(1) of

the CWA or pollutants listed as hazardous under Section 311 of the CWA and have ancillary operations that could result in significant amounts of these pollutants reaching waters of the United States. BMPs have been selected based on those appropriate for this specific facility (see Sections 304(e) and 402(a)(1) of the CWA and 40 CFR §122.44(k)).

In essence, the SWPPP requirement directs the Permittee to review the physical equipment, the operational procedures, and the operator training for the Terminal. The objective of this review is to protect the local waterway by minimizing the pollutants discharged through inadequate facility design, through human error, or through equipment malfunction. In concert with the EPA requirements, the Commonwealth of Massachusetts has also addressed BMPs in their regulations at 314 CMR 3.00.

EPA reviewed BMPs in the ELG Document, and BMPs selected for similar facilities that satisfy non-numeric effluent limitations including minimizing exposure, implementing control measures, preventative maintenance programs, and spill prevention and response procedures, and developing management and handling protocols for sediment, runoff and run-on, hydrostatic testing, tank bottom water, snow and ice control, nuisance vegetation control and ethanol storage. The Permittee may select and implement BMPs as appropriate to meet the requirements in the Draft Permit. However, the Draft Permit also includes the following site-specific BMPs:

- The discharge practices BMP requires, to the greatest extent practicable, the Permittee describe the procedure for initiating discharge in order to minimize runoff, run-on and re-entrainment of pollutants. This BMP also requires the Permittee avoid worst-case conditions, generally identified as the period of time immediately before and after slack tide and periods of lowest receiving water flow, when discharging. The BMP requires Sunoco to identify other site-specific factors that may contribute to worst-case conditions, determine if additional controls are necessary that reduce the potential to contribute pollutants to stormwater, and establish a minimum frequency for sweeping of paved surfaces. Discharge practices also include those necessary to yield data representative of discharges from the Terminal and the receiving water, where ambient sampling is required (e.g., operator protocols, sampling location, sample collection, data quality assessment).
- The spill control BMP requires the Permittee to document methods and measures intended to reduce, minimize or eliminate the occurrence and impact of spills, document the procedure for informing the appropriate entity of accidental releases at the Terminal, and maintain a record of reportable releases at the Terminal.[27] The Draft Permit does not authorize the discharge of reportable quantities of petroleum products as a result of accidental release from the portions of the Terminal covered by this permit through Outfall 001. Specific exceptions are described in Part II to the Draft Permit, entitled "Standard Conditions". MassDEP assumes responsibility for reportable conditions required for certain spills under the MCP.
- The stormwater system BMP requires the Permittee to evaluate the integrity of the stormwater collection system, to determine the relative contribution of pollutants, if any, from contact with potentially contaminated groundwater and soil. This BMP requires the Permittee to

[27] The Permittee may reference appropriate portions of the Terminal's Spill Prevention, Control, and Countermeasure (SPCC) Plan.

document any stormwater system components that are potentially located below the annual high groundwater table that are susceptible to groundwater infiltration. The Permittee must assess through appropriate measures the level of infiltration that occurs (e.g., conduct a visual inspection of the readily accessible portions of the stormwater collection system, and/or measurement of groundwater and stormwater accumulation points as verification of segregation). The Permittee is not required to evaluate components of the stormwater collection system that are installed above grade for this BMP.

The Draft Permit directs the Permittee to incorporate BMPs directly into the SWPPP. BMPs become enforceable elements of the permit upon submittal of a SWPPP certification within 90 days of the effective date of the permit. Therefore, BMPs are permit conditions comparable to the numerical effluent limitations and are required to minimize the discharge of any pollutants through the proper operation of the Terminal.

8. Essential Fish Habitat (EFH)

Under the 1996 Amendments (PL 104-267) to the Magnuson-Stevens Fishery Conservation and Management Act (16 U.S.C. §1801 et seq. (1998)), EPA is required to consult with the National Marine Fisheries Service (NMFS) if EPA's actions or proposed actions that it funds, permits, or undertakes, may adversely impact any essential fish habitat, such as waters and substrate necessary to fish for spawning, breeding, feeding or growth to maturity (16 U.S.C. §1802(10)). "Adversely impact" means any impact which reduces the quality and/or quantity of EFH (50 CFR §600.910(a)). Adverse effects may include direct (e.g., contamination or physical disruption), indirect (e.g., loss of prey, reduction in species' fecundity), site-specific or habitat-wide impacts, including individual, cumulative, or synergistic consequences of actions. Essential fish habitat is only designated for species for which federal fisheries management plans exist (16 U.S.C. §1855(b)(1)(A)) EFH designations for New England were approved by the U.S. Department of Commerce on March 3, 1999.

EPA has determined that the Chelsea River is covered by the EFH designation for estuarine systems at Latitude 42° 23' 5.38" N Longitude 71° 01' 26.76" W as determined by the NOAA EFH Mapper.[28]
A copy of the managed species within the EFH is included in Attachment 5. EPA also noted that the documentation in support of the Boston Harbor Inner Harbor Maintenance Dredging Project identified a "potential winter flounder spawning area" near the confluence of the Chelsea and Mystic rivers.[29] Winter flounder is covered under Essential Fish Habitat regulations. This species is a commercially fished, federally managed, bottom dwelling fish. Winter flounder eggs and larvae are typically found near the bottom in shallow areas. However, since winter flounder spawn on clean sand, the deep navigation channel, with more silt by composition, in general, would not be expected to be high quality spawning habitat for winter flounder.

---

[28] NOAA EFH Mapper available at http://www.nero.noaa.gov/hcd/index2a.htm
[29] See *Final Summary Report Plume Monitoring, Boston Harbor Inner Harbor Maintenance Dredging Project*. June 2009 *for* U.S. Army Corps of Engineers New England District.

EPA has concluded that the limits and conditions contained in this Draft Permit minimize adverse effects to the EFH and managed species, if present, for the following reasons:

- The frequency of discharge from the Terminal is limited (intermittent resulting almost entirely from accumulation of stormwater);
- The effluent limitations and other permit requirements identified in this Fact Sheet are designed to be protective of all aquatic species, including those with EFH designations; and
- The permit prohibits any violation of Massachusetts WQSs.

EPA believes that the conditions and limitations contained within the draft permit adequately protect all aquatic life, including those species with EFH designation in Boston Harbor. Impacts associated with issuance of this permit to the EFH species, their habitat and forage, have been minimized to the extent that no significant adverse impacts are expected. Further mitigation is not warranted. If adverse impacts to EFH are detected because of this permit action, or if new information is received that changes the basis for EPA's conclusion, NMFS will be notified and an EFH consultation will be initiated.

9. Endangered Species Act (ESA)

Under Section 7(a) of the Endangered Species Act, every federal agency is required to ensure that any action it authorizes, funds, or carries out is not likely to jeopardize federally listed endangered or threatened species of fish, wildlife, or plants, or result in the adverse modification of critical habitat of such species. EPA initiates consultation concerning listed species under their purviews with the United States Fish and Wildlife Service (USFWS) for freshwater species, and the NMFS for marine species and anadromous fish.

No federally listed threatened or endangered species have been identified for the City of Boston.[30] In addition, EPA has reviewed the federal endangered or threatened species of fish, wildlife, and plants in Suffolk County to determine if the re-issuance of this NPDES permit could potentially impact any such listed species. No threatened species were identified for Suffolk County.[31]

The known distribution of two endangered species of anadromous fish which occur in Massachusetts, shortnose sturgeon (*Acipenser brevirostrum*) and Atlantic sturgeon (*Acipenser oxyrinchus*), include the Merrimack and Connecticut Rivers, and the Merrimack and Taunton Rivers, respectively.[32] However, adults may occur in estuarine and coastal habitats in Massachusetts. In addition, threatened and endangered species of whale and sea turtle may be present in Boston Harbor.

The Terminal is located along a highly urbanized, tidally influenced river near the confluence with the Mystic River, which receives discharges via Outfall 001. EPA received guidance from NMFS for

---

[30] See listing for Suffolk County in "Federally Listed Endangered and Threatened Species in Massachusetts." Massachusetts Natural Heritage and Endangered Species Program, October 7, 2011.
[31] See listings for Suffolk County in *Federally Listed Endangered and Threatened Species in Massachusetts* at http://www.fws.gov/newengland/EndangeredSpec-Consultation_Project_Review.htm
[32] See documents for shortnose sturgeon and Atlantic sturgeon at http://www.mass.gov/eea/docs/dfg/nhesp/species-and-conservation/nhfacts/acipenser-brevirostrum.pdf

the action area in this Draft Permit, which stated that NMFS is "…not aware of any listed species that may be present within Chelsea Creek or be affected by activities occurring in that area."[33] Based on this assessment, EPA has determined that no federally protected species are likely to be present in the action area. Therefore, consultation with NMFS or the USF&WS under Section 7 of the ESA is not required.

10. Environmental Justice (EJ)

Executive Order 12898 entitled "Federal Actions To Address Environmental Justice in Minority Populations and Low-Income Populations" states in relevant part that "each Federal agency shall make achieving environmental justice part of its mission by identifying and addressing, as appropriate, disproportionately high and adverse human health or environmental effects of its programs, policies, and activities on minority populations and low-income populations...." The order also provides that federal agencies are required to implement the order consistent with and to the extent permitted by existing law. In addition, EPA adopted its "Proposed Regional Actions to Promote Public Participation in the Permitting Process" in June 2012 (see 77 FR 3805). EPA implemented a robust outreach and involvement process consistent with the Executive Order and EPA policy that is described in detail in the Environmental Justice Analysis (EJA), which was prepared in conjunction with the Draft Permit.

The Draft Permit implements existing water pollution prevention and control requirements, including applicable technology-based and water quality-based limits, standards, and practices to ensure compliance with applicable CWA requirements, and meet Massachusetts WQSs. As discussed in detail in the EJA, EPA evaluated the potential for significant adverse effects within the Draft Permit's area of coverage and surrounding communities. The EJA describes the evaluation of the vulnerability of these surrounding communities to the effects of the Terminal's discharges. The EJA evaluates the potential for disproportionately high and adverse human health or environmental effects, which might be unreasonable in relation to the benefits derived from the discharges.

In conjunction with EPA's evaluation, several additional special conditions were included in the Draft Permit to ensure adverse impacts do not occur because of discharges from the Terminal alone or in combination with other discharges from similar facilities to Chelsea River. The Draft Permit imposes a monitoring program to gather relevant information about potential effects of the discharges to Chelsea River. Additionally, EPA has the authority to modify a permit if the threat of adverse environmental impact from the discharges were to occur, that is, a discharge which violates WQSs or causes or contributes to an excursion above WQC. The monitoring program is designed to obtain additional information, which can be used in ongoing surveillance of permitted activities and in future permit decisions.

EPA carefully considered the potential EJ impacts related to the Draft Permits' authorized discharges, especially the potential for disproportionate effects on communities and residents that reside in close proximity to the Terminal or Chelsea River. EPA has determined that discharges authorized by the Draft Permit will not violate WQSs. Where EPA determined that a pollutant has a reasonable

[33] Correspondence from Christine Vaccaro, NMFS, to John Nagle, EPA Region 1, August 5, 2013 regarding discharges to Chelsea River segment (MA71-06).

potential to cause or contribute to an excursion above WQC, EPA has maintained or added numeric WQBELs. EPA therefore determined that there will not be disproportionately high and adverse human health or environmental effects with respect to these discharges on minority or low-income populations residing in the Chelsea, Revere and East Boston areas of evaluation.

EPA's evaluation and determinations are discussed in more detail in the EJA, which is included in the administrative record associated with this permit (MA0004006).

11. Monitoring

The permit limitations and conditions have been established to yield data representative of the discharges under the authority of Section 308(a) of the CWA, according to regulations set forth at 40 CFR §122.41(j), 122.44(i) and 122.48. The monitoring program in the permit specifies routine sampling and analysis, which will provide continuous information on the reliability and effectiveness of the installed pollution abatement equipment. The approved analytical procedures found in 40 CFR §136 are required unless other procedures are explicitly required in the permit. The Permittee is obligated to monitor and report sampling results to EPA and the MassDEP within the time specified within the permit. Timely reporting is essential for the regulatory agencies to expeditiously assess compliance with permit conditions.

The Draft Permit includes new provisions related to DMR submittals to EPA and the State. The Draft Permit requires that, no later than one year after the effective date of the permit, the Permittee submit all monitoring data and other reports required by the permit to EPA using NetDMR, unless the Permittee is able to demonstrate a reasonable basis, such as technical or administrative infeasibility, that precludes the use of NetDMR for submitting DMRs and reports ("opt-out request"). In the interim (until one year from the effective date of the permit), the Permittee may either submit monitoring data and other reports to EPA in hard copy form, or report electronically using NetDMR.

NetDMR is a national web-based tool for regulated CWA permittees to submit DMRs electronically via a secure Internet application to EPA through the Environmental Information Exchange Network. NetDMR allows participants to discontinue mailing in hard copy forms under 40 CFR §122.41 and §403.12. EPA currently conducts free training on the use of NetDMR, and anticipates that the availability of this training will continue to assist permittees with the transition to use of NetDMR. NetDMR can be accessed at http://www.epa.gov/netdmr. Further information about NetDMR, including contacts for EPA Region 1, information on upcoming trainings, and contact information for Massachusetts, is provided on this website.

The Draft Permit requires the Permittee to report monitoring results obtained during each calendar month using NetDMR, **no later than the 15th day of the month following the completed reporting period.** Once a permittee begins submitting reports using NetDMR, all reports required under the permit shall be submitted to EPA as an electronic attachment to the DMR, with the exception of the results of hydrostatic testing, which are required in duplicate in hard copy form. Once a permittee begins submitting reports using NetDMR, it will no longer be required to submit hard copies of DMRs or other reports to EPA and will no longer be required to submit hard copies of DMRs to

MassDEP. However, permittees must continue to send hard copies of reports other than DMRs to MassDEP until further written notice from MassDEP.

The Draft Permit also includes an "opt-out" request process. Permittees who believe they cannot use NetDMR due to technical or administrative infeasibilities, or other logical reasons, must demonstrate the reasonable basis that precludes the use of NetDMR. These permittees must submit the justification, in writing to EPA, at least 60 days prior to the date the Terminal would have otherwise been required to begin using NetDMR. Opt-outs become effective upon the date of written approval by EPA and are valid for 12 months. The opt-outs expire at the end of this 12 month period. Upon expiration, the Permittee must submit DMRs and reports to EPA using NetDMR, unless the Permittee submits a renewed opt-out request 60 days prior to expiration of its opt-out, and such a request is approved by EPA.

Until electronic reporting using NetDMR begins, or for those permittees with written approval from EPA to continue to submit hard copies of DMRs, the Draft Permit requires that submittal of DMRs and other reports required by the permit continue in hard copy format. Hard copies of DMRs must be postmarked no later than the 15th day of the month following the completed reporting period.

12. State Certification Requirements

EPA may not issue a permit unless the MassDEP certifies that the effluent limitations contained in the permit are stringent enough to assure that the discharge will not cause the receiving water to violate State Surface Water Quality Standards or unless state certification is waived. MassDEP staff have reviewed the draft permit and advised EPA that the limitations are adequate to protect water quality. EPA has requested permit certification by the State pursuant to 40 CFR §124.53 and expects that the draft permit will be certified.

13. Comment Period, Hearing Requests, and Procedures for Final Decisions

All persons, including applicants, who believe any condition of the Draft Permit is inappropriate must raise all issues and submit all available arguments and all supporting material for their arguments in full by the close of the public comment period, to Shauna Little, U.S. EPA, Office of Ecosystem Protection, Industrial Permits Section, 5 Post Office Square, OEP06-1, Boston, Massachusetts 02109-3912. Any person may submit oral or written comments to EPA and the State Agency at the public hearing, scheduled for April 17, 2014. In reaching a final decision on the Draft Permit, the EPA will respond to all significant comments and make these responses available to the public at EPA's Boston office.

Following the close of the comment period, and after the public hearing, the EPA will issue a Final Permit decision and forward a copy of the final decision to the applicant and each person who has submitted written comments or requested notice. Within 30 days following the notice of the Final Permit decision, any interested person may submit a petition for review of the permit to EPA's Environmental Appeals Board consistent with 40 CFR §124.19.

14. EPA and MassDEP Contacts

Additional information concerning the draft permit may be obtained between the hours of 9:00 a.m. and 5:00 p.m., Monday through Friday, excluding holidays, from the EPA and MassDEP contacts below:

Shauna Little, EPA– Region 1
5 Post Office Square, Suite 100 (OEP06-1)
Boston, Massachusetts 02109-3912
Telephone: (617) 918-1989
FAX: (617) 918-0989
Email: little.shauna@epa.gov

Cathy Vakalopoulos, MassDEP
Division of Wastewater Management
Surface Water Discharge Permit Program
1 Winter Street, 5th Floor
Boston, Massachusetts 02108
Telephone: (617) 348-4026
FAX: (617) 292-5696
Email: catherine.vakalopoulos@state.ma.us

3/10/14

Ken Moraff, Director
Office of Ecosystem Protection
U.S. Environmental Protection Agency

Attachment 1: Sunoco East Boston Terminal Location Map

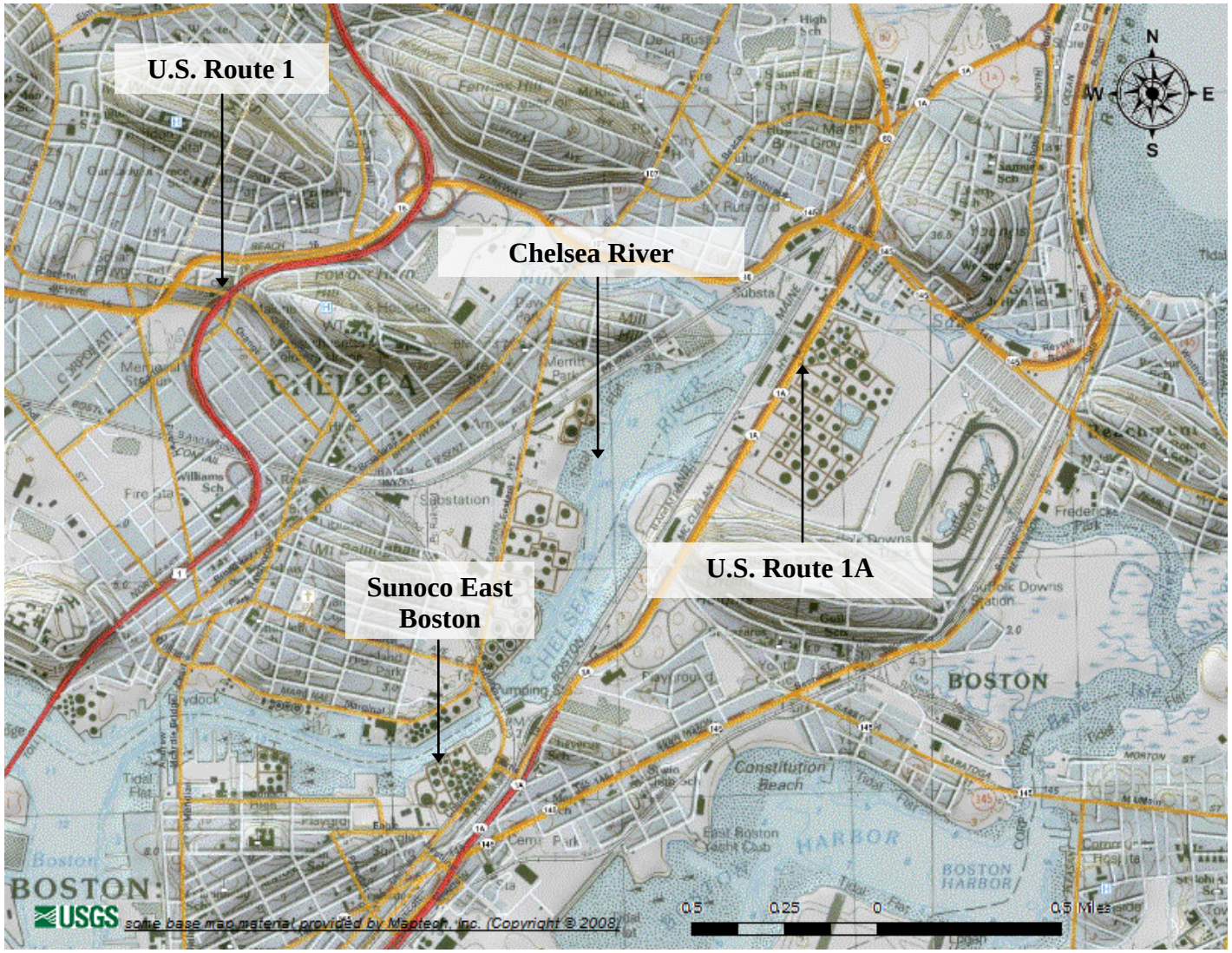

Source: http://water.usgs.gov/osw/streamstats/massachusetts.html

Attachment 2: Sunoco East Boston Terminal Site Plan

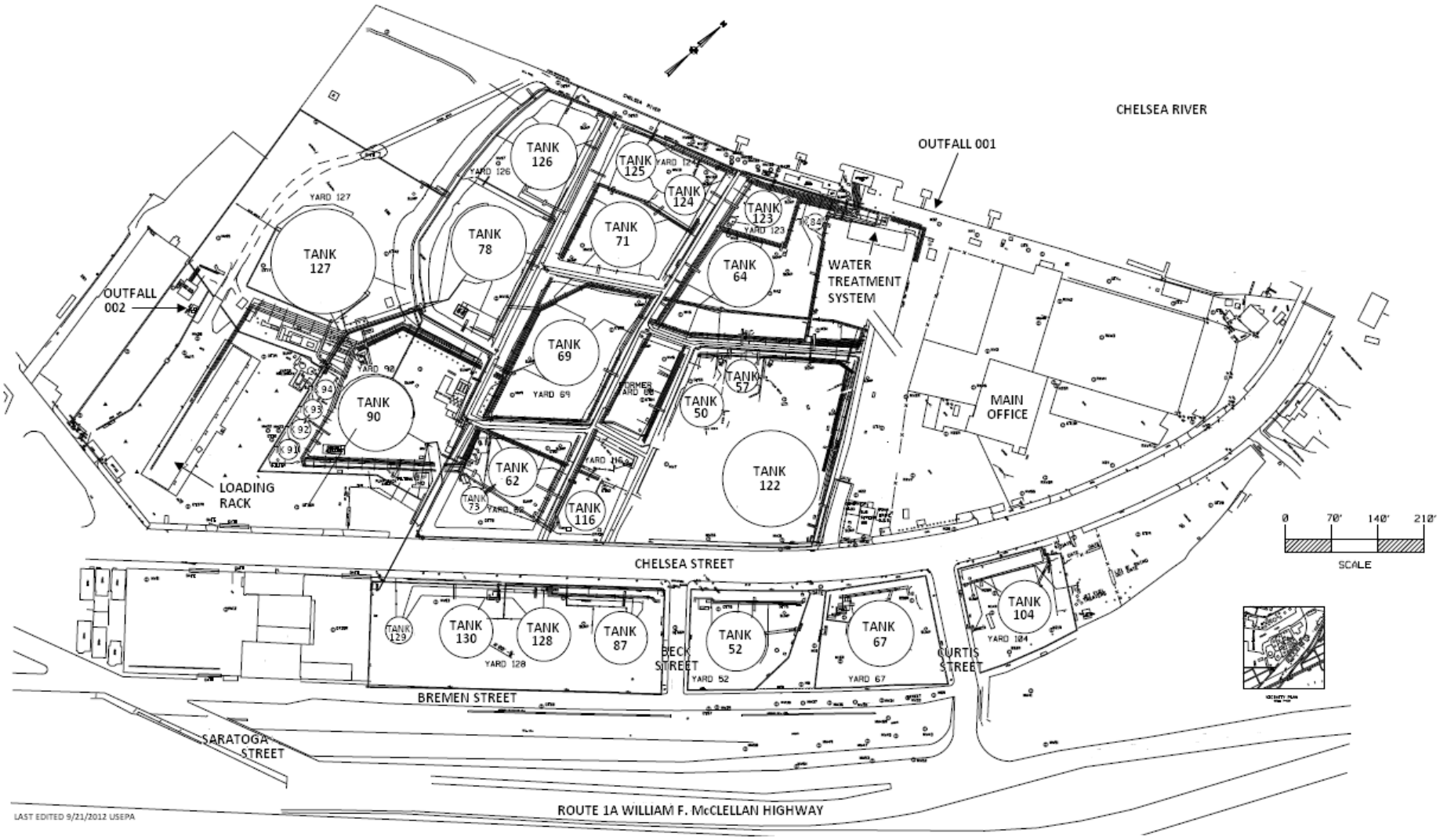

Attachment 3: Discharge Monitoring Data

SUNOCO - MA0004006
Outfall Serial Number 001
Monthly Reporting

Monitoring Period End Date	Flow (Mgal/mo)	Flow Rate (Mgal/d)		Oil & Grease (mg/L)	pH (SU)		TSS (mg/L)	
	Total	Monthly Avg	Daily Max	Daily Max	Minimum	Maximum	Monthly Avg	Daily Max
01/31/2009	1.5	93.	290.	7.16	6.8	6.8	.	.
02/28/2009	2.3	85.88	215.73	.	6.4	6.4	.	.
03/31/2009	1.2	141.	198.	.	6.9	6.9	.	.
04/30/2009	3.5	219.	380.	.	9.	9.	.	.
05/31/2009	9.8	235.9	530.5	5.22	8.3	8.3	.	.
06/30/2009	4.2	192.	330.	.	8.9	8.9	.	.
07/31/2009	5.78	161.	285.	.	6.7	6.7	.	.
08/31/2009	2.1	111.	264.	.	7.5	7.7	.	.
09/30/2009	1.2	144.	238.	.	7.1	7.1	.	.
10/31/2009	2.8	128.	208.	.	7.	7.	.	.
11/30/2009	2.21	118.2	313.4	5.29	7.4	7.7	.	.
12/31/2009	2.01	78.	211.	.	7.55	7.71	.	.
01/31/2010	No Discharge							
02/28/2010	1.36	72.69	122.31	.	7.1	7.1	.	.
03/31/2010	2.97	77.	253.	.	7.84	7.9	.	.
04/30/2010	3.7	153.	254.	---	7.4	7.7	---	---
05/31/2010	No Discharge							
06/30/2010	---	---	---	---	---	---	---	---
07/31/2010	.6	133.	298.	---	7.3	7.8	4	4
08/31/2010	No Discharge							
09/30/2010	1.8	239.	315.	<5	6.83	7.11	<10	<10.8
10/31/2010	.96	159.	225.	<5	7.08	7.08	<4	<4
11/30/2010	.94	122.	258.	<5	7.09	7.09	<4	<4
12/31/2010	No Discharge							
01/31/2011	.11	105.	189.	<5	6.86	6.86	4	4
02/28/2011	.097	112.	201.	<5	6.56	6.56	10	10
03/31/2011	2.265	194.	330.	<5	7.26	7.26	5	5
04/30/2011	1.597	220.	263.	<5	6.04	6.04	11	11
05/31/2011	1.105	430.4	530.	<5	7.6	7.6	<4	<4
06/30/2011	1.416	267.6	345.	<5	6.8	6.8	<4	<4
07/31/2011	No Discharge							
08/31/2011	3.04	.2	.6	<5	7.82	7.82	<4	<4
09/30/2011	1.707	270.3	284.	<5	7.9	8.	<4	<4
10/31/2011	1.750395	180.35	275.	<5	7.3	7.3	<4	<4
11/30/2011	1.502	163.24	215.	<5	7.9	7.9	<4	<4
12/31/2011	2.05	258.	410.	<5	6.7	6.7	<4	<4
01/31/2012	.4784	394.	440.	<5	7.2	7.2	<4	<4
02/29/2012	.3042	320.	41.	<5	7.7	7.7	<4	<4
03/31/2012	.5479	332.43	435.	<5	7.9	7.9	<4	<4

04/30/2012	1.042	308.	331.	<5	7.3	7.3	11	11
05/31/2012	1.296	284.58	342.	<5	7.1	7.1	<4	<4
06/30/2012	1.358	314.58	423.	<5	7.5	7.5	<4	<4
07/31/2012	.3125	337.5	340.	<5	6.67	6.67	<4	<4
08/31/2012	.647	321	346	<5	7.7	7.7	<4	<4
09/30/2012	.8858	319.13	335	<5	7.8	7.8	<4	<4
10/31/2012	.539	271.33	291	<5	7.8	7.8	<4	<4
11/30/2012	.7137	262	326	<5	7.8	7.8	<4	<4
12/31/2012	1.49	278.6	366	<5	7.15	7.15	<4	<4
01/31/2013	.943	246	373	<5	7.9	7.9	<4	<4
02/28/2013	.361	319	325	<5	7.9	7.9	<4	<4
03/31/2013	.417	168.4	364	<5	7.9	7.9	<4	<4
04/30/2013	1.23	149.5	151	<5	7.9	7.9	<4	<4
05/31/2013	.36	246.5	286	<5	6.7	6.7	<4	<4
06/30/2013	.506	247.65	310	<5	7.8	7.8	<4	<4
07/31/2013	.85	277	312	<5	7.8	7.8	<4	<4
08/31/2013	.75	291.4	302	<5	7.7	7.7	<4	<4
09/30/2013	No Discharge							
10/31/2013	.11	311	311	<5	7.5	7.5	<4	<4
11/30/2013	No Discharge							
12/31/2013								
2006 Permit Limits	**Report**	**Report**	**Report**	**15**	**6.5**	**8.5**	**30**	**100**
Minimum	0.097	0.2	0.6	.	6.04	6.04	.	.
Maximum	9.8	430.4	530.5	7.16	9	9	11	11
Average	1.62	213.01	293.76	0.36	7.40	7.44	0.90	0.90
# of measurements	52	52	52	50	52	52	51	51

. = Pollutant not detected above laboratory practical quantitation limits (PQLs); when provided in Discharge Monitoring Reports (DMRs), the PQLs are noted as <PQL for the analyte for the date of analysis

--- = Data not available

Average calculated using only detected values

SUNOCO - MA0004006
Outfall Serial Number 001
Quarterly Reporting – Group I PAHs

Monitoring Period End Date	Benzo(a) anthracene (µg/L)	Benzo(a) pyrene (µg/L)	Benzo(b) fluoranthene (µg/L)	Benzo(k) fluoranthene (µg/L)	Chrysene (µg/L)	Dibenzo (a,h) anthracene (µg/L)	Indeno (1,2,3-c,d) pyrene (µg/L)
03/31/2009	.	.	.	.	.	.	.
06/30/2009	.	.	.	.	.	.	.
09/30/2009	.	.	.	.	.	.	.
12/31/2009	.	.	.	.	.	.	.
03/31/2010	.	.	.	.	.	.	.
06/30/2010	---	---	---	---	---	---	---
09/30/2010	<.208	<0.104	<.521	<.521	<1.04	<.312	<.312
12/31/2010	No Discharge						
03/31/2011	<.552	<1.1	<1.1	<1.1	<.552	<.552	<.552
06/30/2011	<.222	<.111	<.556	<.556	<1.11	<.333	<.333
09/30/2011	<.202	<.101	<.505	<.505	<1.01	<.303	<.303
12/31/2011	<.202	<.101	<.505	<.505	<1.01	<.303	<.303
03/31/2012	<.211	<.105	<.526	<.526	<1.05	<.316	<.316
06/30/2012	<.215	<.108	<.538	<.538	<1.08	<.323	<.323
09/30/2012	<.211	<.105	<.526	<.526	<1.05	<.316	<.316
12/31/2012	<.206	<.103	<.515	<.515	<1.03	<.309	<.309
03/31/2013	<.204	<.102	<.51	<.51	<1.02	<.306	<.306
06/30/2013	<.208	<.104	<.521	<.521	<1.04	<.312	<.312
09/30/2013	<.213	<.106	<.532	<.532	<1.06	<.319	<.319
12/31/2013							
2006 Permit Limits	**Sum of Group I PAHs <10**						
Minimum	.	.	.	.	.	.	.
Maximum	.	.	.	.	.	.	.
Average	NA	NA	NA	NA	NA	NA	NA
# of measurements	17	17	17	17	17	17	17

. = Pollutant not detected above laboratory PQLs; when provided in DMRs, the PQLs are noted as <PQL for the analyte for the date of analysis
--- = Data not available
NA = not applicable

SUNOCO - MA0004006
Outfall Serial Number 001
Quarterly Reporting – Group II PAHs

Monitoring Period End Date	Acenaphthene (µg/L)	Acenaphthylene (µg/L)	Anthracene (µg/L)	Benzo(g,h,i) perylene (µg/L)	Fluoranthene (µg/L)	Fluorene (µg/L)	Naphthalene (µg/L)	Phenanthrene (µg/L)	Pyrene (µg/L)
03/31/2009	.	.	.	.	.	.	.	.	.
06/30/2009	.	.	.	.	.	.	.	.	.
09/30/2009	.	.	.	.	.	.	.	.	.
12/31/2009	.	.	.	.	.	.	.	.	.
03/31/2010	.	.	.	.	.	.	.	.	.
06/30/2010	---	---	---	---	---	---	---	---	---
09/30/2010	<1.04	<1.04	<1.04	<1.04	<1.04	<1.04	<1.04	<1.04	<1.04
12/31/2010	No Discharge								
03/31/2011	<.552	<.276	<.552	<1.1	<.552	<.552	<.829	<.552	1.38
06/30/2011	<1.11	<1.11	<1.11	<1.11	<1.11	<1.11	<1.11	<1.11	<1.11
09/30/2011	<1.01	<1.01	<1.01	<1.01	<1.01	<1.01	<1.01	<1.01	<1.01
12/31/2011	<1.01	<1.01	<1.01	<1.01	<1.01	<1.01	<1.01	<1.01	<1.01
03/31/2012	<1.05	<1.05	<1.05	<1.05	<1.05	<1.05	<1.05	<1.05	<1.05
06/30/2012	<1.08	<1.08	<1.08	<1.08	<1.08	<1.08	<1.08	<1.08	<1.08
09/30/2012	<1.05	<1.05	<1.05	<1.05	<1.05	<1.05	<1.05	<1.05	<1.05
12/31/2012	<1.03	<1.03	<1.03	<1.03	<1.03	<1.03	<1.03	<1.03	<1.03
03/31/2013	<1.02	<1.02	<1.02	<1.02	<1.02	<1.02	<1.02	<1.02	<1.02
06/30/2013	<1.04	<1.04	<1.04	<1.04	<1.04	<1.04	<1.04	<1.04	<1.04
09/30/2013	<1.06	<1.06	<1.06	<1.06	<1.06	<1.06	<1.06	<1.06	<1.06
12/31/2013									
2006 Permit Limits	**Sum of Group II PAHs <10**								
Minimum	.	.	.	.	.	.	.	.	.
Maximum	.	.	.	.	.	.	.	.	1.38
Average	NA	NA	NA	NA	NA	NA	NA	NA	NA
# of measurements	17	17	17	17	17	17	17	17	17

. = Pollutant not detected above laboratory PQLs; when provided in DMRs, the PQLs are noted as <PQL for the analyte for the date of analysis
--- = Data not available
NA = not applicable

SUNOCO - MA0004006 Outfall Serial Number 001 Quarterly Reporting – VOCs + Ethanol					
Monitoring Period End Date	Benzene (µg/L)	Toluene (µg/L)	Ethylbenzene (µg/L)	Total Xylenes (µg/L)	Ethanol (mg/L)
03/31/2009	189	77.9	<5	15	<1
06/30/2009	.	.	.	.	.
09/30/2009	.	.	.	.	.
12/31/2009	.	.	.	.	.
03/31/2010	.	.	.	.	.
06/30/2010	---	---	---	---	---
09/30/2010	<2	<2	<2	<2	<10
12/31/2010	No Discharge				
03/31/2011	<2	<5	<5	<5	<1
06/30/2011	<2	<2	<2	<2	<11.1
09/30/2011	<2	<2	<2	<2	<1
12/31/2011	<2	<2	<2	<2	<1
03/31/2012	<2	<2	<2	<2	<10
06/30/2012	<2	<2	<2	<2	<10
09/30/2012	<2	<2	<2	<2	<10
12/31/2012	<2	<2	<2	<2	<10
03/31/2013	<2	<2	<2	<2	<10
06/30/2013	<2	<2	<2	<2	<10
09/30/2013	<2	<2	<2	<2	<1000
12/31/2013					
2006 Permit Limits	**40**	**Report**	**Report**	**Report**	**Report**
Minimum	.	.	.	.	.
Maximum	189	77.9	.	15	.
Average	NA	NA	NA	NA	NA
# of measurements	17	17	17	17	17

. = Pollutant not detected above laboratory PQLs; when provided in DMRs, the PQLs are noted as <PQL for the analyte for the date of analysis
--- = Data not available
NA = not applicable

SUNOCO - MA0004006
Outfall Serial Number 001
2/Year Reporting

Monitoring Period End Date	LC_{50} % 48 Hour Acute *Americamysis. bahia*	Ammonia (mg/L)	Aluminum (mg/L)	Cadmium (mg/L)	Chromium (mg/L)	Copper (mg/L)	Lead (mg/L)	Nickel (mg/L)	Zinc (mg/L)
03/31/2008	>100	0.7	0.028	<0.001	<0.002	<0.002	0.006	0.003	0.007
09/30/2008	>100	0.23	0.02	<0.0005	<0.002	<0.002	<0.0005	<0.002	0.007
03/31/2009	>100	2.5	0.01	<0.0005	<0.002	0.002	0.0007	<0.002	0.012
09/30/2009	>100	1.1	0.02	<0.0005	<0.002	<0.002	0.0008	<0.002	0.004
03/31/2010	>100	0.13	0.028	<0.0005	<0.002	0.009	0.0007	<0.002	0.004
09/30/2010	>100	0.6	0.066	<0.0005	<0.002	0.002	0.001	<0.002	0.005
03/31/2011	>100	0.42	0.091	<0.0005	<0.002	<0.002	0.004	<0.002	0.004
09/30/2011	>100	---	---	---	---	---	---	---	---
03/31/2012	>100	0.29	0.033	<0.0005	<0.002	<0.002	0.006	<0.002	<0.002
09/30/2012	>100	0.7	0.027	<0.0005	<0.002	<0.002	<0.0005	<0.002	<0.002
03/31/2013	>100	---	---	---	---	---	---	---	---
2006 Permit Limits	**>50**	NA	NA	NA	NA	NA	NA	NA	NA
Minimum	>100	0.13	0.01	.	.	.	.	.	.
Maximum	>100	2.50	0.091	.	.	0.009	0.006	0.003	0.012
Average	>100	0.74	0.04	NA	NA	0.004	0.003	NA	0.006
# of measurements	11	9	9	9	9	9	9	9	9

. = Pollutant not detected above laboratory PQLs; when provided in DMRs, the PQLs are noted as <PQL for the analyte for the date of analysis
--- = Data not available
Average calculated using only detected values
NA = not applicable

SUNOCO - MA0004006
Outfall Serial Number 002
Monthly Reporting

Monitoring Period End Date	Flow (Mgal/mo)	Flow Rate (Mgal/day)		Total Petroleum Hydrocrabons (mg/L)	Cyanide (µg/L)	pH (S.U.)	
	Total	Monthly Avg	Daily Max	Daily Max	Daily Max	Minimum	Maximum
01/31/2009	.04	.9	38.8	.	.	6.8	6.8
02/28/2009	.04	.87	23.65	.	.	7.	7.
03/31/2009	.03	.66	24.	.	.	7.1	7.1
04/30/2009	.06	1.43	21.1	.	10	6.7	6.7
05/31/2009	.08	1.8	1.8	.	.	6.5	6.5
06/30/2009	.09	1.98	27.25	.	.	7.	7.
07/31/2009	.11	2.4	45.3	.	.	7.2	7.2
08/31/2009	.06	1.42	25.1	.	<10	6.9	6.9
09/30/2009	.05	1.22	22.3	.	<10	7.	7.
10/31/2009	.05	1.17	41.9	.	<10	7.3	7.3
11/30/2009	.05	1.1	24.2	.	.	7.8	7.8
12/31/2009	.03	.76	24.75	.	.	6.9	6.9
01/31/2010	.04	.8	21.9	.	<10	6.6	6.6
02/28/2010	.06	1.55	30.78	.	.	6.8	6.8
03/31/2010	.06	1.3	62.5	.	<10	7.3	7.3
04/30/2010	.004	.33	27.4	---	---	6.5	6.5
05/31/2010	No Discharge						
06/30/2010	---	---	---	---	---	---	---
07/31/2010	No Discharge						
08/31/2010	No Discharge						
09/30/2010	No Discharge						
10/31/2010	No Discharge						
11/30/2010	.0199	.46	38.325	<4.1	<10	6.9	6.9
12/31/2010	No Discharge						
01/31/2011	.0067	.152	56.325	<4.1	<10	7.6	7.6
02/28/2011	.0079	.1964	22.275	<4.1	<10	7.3	7.3
03/31/2011	.0255	.5715	24.625	<4.1	<10	7.2	7.2
04/30/2011	.0056	.1293	21.35	<4.1	<10	7.	7.
05/31/2011	.0119	.2668	22.175	<4.1	<10	6.5	6.5
06/30/2011	.0024	.0565	3.416	<4.1	<10	7.	7.
07/31/2011	.0008	.0182	6.188	<4.1	<10	6.5	6.5
08/31/2011	.0014	.0311	3.464	<4.1	<10	6.9	6.9
09/30/2011	.0022	.0511	4.384	<4.1	<10	6.	6.
10/31/2011	.0013	.0297	3.588	<4.1	<10	6.7	6.7
11/30/2011	.0021	.0478	3.488	<4.1	<10	7.2	7.2
12/31/2011	.0119	.2747	14.2	<4.1	<10	7.6	7.6
01/31/2012	.0142	.6345	14.2	<4.17	<5	6.2	6.2
02/29/2012	.0024	.0563	14.7	<3.77	2.59*	6.44	6.44
03/31/2012	.0185	.4153	15.	<3.81	<5	7.8	7.8

04/30/2012	.0087	.2027	12.6	<3.77	---	6.45	6.45
05/31/2012	.0124	.2782	12.128	<4.17	<5	6.45	6.45
06/30/2012	.0035	.0812	24.85	<3.81	4.9*	6.86	6.86
07/31/2012	.0019	.0424	26.225	<3.62	3.92*	6.92	6.92
08/31/2012	.0045	.1007	25.325	<4	<5	7.38	7.38
09/30/2012	.008	.1855	47.6	<4	<5	6.62	6.62
10/31/2012	.0091	.2035	20.2	<3.62	5.36	6.84	6.84
11/30/2012	.0104	.2412	21.675	<3.66	<5	6.6	6.6
12/31/2012	.0308	.6896	21.45	<4.92	<5	7.11	7.11
01/31/2013	.0179	.4011	---	<4	<5	7.53	7.53
02/28/2013	---	---	---	<3.62	<5	7.5	7.5
03/31/2013	.0001	.4647	29.082	<3.62	<5	7.5	7.5
04/30/2013	No Discharge						
05/31/2013	No Discharge						
06/30/2013	No Discharge						
07/31/2013	.0051	.1136	46.35	<4.47	<5	7.13	7.13
08/31/2013	No Discharge						
09/30/2013	No Discharge						
10/31/2013	No Discharge						
11/30/2013	No Discharge						
12/31/2013							
2006 Permit Limits	**Report**	**Report**	**Report**	**5**	**Report**	**6.5**	**8.5**
Minimum	0.0001	0.0182	1.8	.	5.36	6	6
Maximum	0.11	2.4	62.5	.	10	7.8	7.8
Average	0.03	0.59	23.67	NA	7.68	6.96	6.96
# of measurements	44	44	43	44	43	45	45

. = Pollutant not detected above laboratory PQLs; when provided in DMRs, the PQLs are noted as <PQL for the analyte for the date of analysis
--- = Data not available
Average calculated using only detected values
NA = not applicable
* = The result shown is an estimated value since it is below the laboratory PQL

SUNOCO - MA0004006
Outfall Serial Number 002
Monthly Reporting – Group I PAHs

Monitoring Period End Date	Benzo(a) anthracene (µg/L)	Benzo(a) pyrene (µg/L)	Benzo(b) fluoranthene (µg/L)	Benzo(k) fluoranthene (µg/L)	Chrysene (µg/L)	Dibenzo (a,h) anthracene (µg/L)	Indeno (1,2,3-c,d) pyrene (µg/L)
	Daily Max	Daily Max	Daily Max	Daily Max	Daily Max	Daily Max	Daily Max
01/31/2009	.	.	.	.	.	.	.
02/28/2009	.	.	.	.	.	.	.
03/31/2009	.	.	.	.	.	.	.
04/30/2009	.	.	.	.	.	.	.
05/31/2009	.	.	.	.	.	.	.
06/30/2009	.	.	.	.	.	.	.
07/31/2009	.	.	.	.	.	.	.
08/31/2009	.	.	.	.	.	.	.
09/30/2009	.	.	.	.	.	.	.
10/31/2009	.	.	.	.	.	.	.
11/30/2009	.	.	.	.	.	.	.
12/31/2009	.	.	.	.	.	.	.
01/31/2010	.	.	.	.	.	.	.
02/28/2010	.	.	.	.	.	.	.
03/31/2010	.	.	.	.	.	.	.
04/30/2010	---	---	---	---	---	---	---
05/31/2010	No Discharge						
06/30/2010	---	---	---	---	---	---	---
07/31/2010	No Discharge						
08/31/2010	No Discharge						
09/30/2010	No Discharge						
10/31/2010	No Discharge						
11/30/2010	<.05	<.1	<.05	<.1	<.1	<.1	<.1
12/31/2010	No Discharge						
01/31/2011	<.05	<.1	<.05	<.1	<.1	<.1	.1
02/28/2011	<.05	<.1	<.05	<.1	<.1	<.1	<.1
03/31/2011	<.05	<.1	<.05	<.1	<.1	<.1	<.1
04/30/2011	<.05	<.1	<.05	<.1	<.1	<.1	<.1
05/31/2011	<.051	<.1	<.051	<.1	<.1	<.1	<.1
06/30/2011	<.05	<.1	<.05	<.1	<.1	<.1	<.1
07/31/2011	<.051	<.1	<.051	<.1	<.1	<.1	<.1
08/31/2011	<.05	<.1	<.05	<.1	<.1	<.1	<.1
09/30/2011	<.051	<.1	<.051	<.1	<.1	<.1	<.1
10/31/2011	<.05	<.1	<.05	<.1	<.1	<.1	<.1
11/30/2011	<.05	<.1	<.05	<.1	<.1	<.1	<.1
12/31/2011	<.05	<.1	<.05	<.1	<.1	<.1	<.1
01/31/2012	<.0943	<.0943	<.0943	<.0943	<.0943	<.0943	<.0943

02/29/2012	<.0952	<.0952	<.0952	<.0952	<.0952	<.0952	<.0952
03/31/2012	<.0952	<.0952	<.0952	<.0952	<.0952	<.0952	<.0952
04/30/2012	<.0943	<.0943	<.0943	<.0943	<.0943	<.0943	<.0943
05/31/2012	<.0952	<.0952	<.0952	<.0952	<.0952	<.0952	<.0952
06/30/2012	<.0943	<.0943	<.0943	<.0943	<.0943	<.0943	<.0943
07/31/2012	<.0952	<.0952	<.0952	<.0952	<.0952	<.0952	<.0952
08/31/2012	<.0971	<.0971	<.0971	<.0971	<.0971	<.0971	<.0971
09/30/2012	<.0952	<.0952	<.0952	<.0952	<.0952	<.0952	<.0952
10/31/2012	<.098	<.098	<.098	<.098	<.098	<.098	<.098
11/30/2012	<.0943	<.0943	<.0943	<.0943	<.0943	<.0943	<.0943
12/31/2012	<.0952	<.0952	<.0952	<.0952	<.0952	<.0952	<.0952
01/31/2013	<.0943	<.0943	<.0943	<.0943	<.0943	<.0943	<.0943
02/28/2013	<.0943	<.0943	<.0943	<.0943	<.0943	<.0943	<.0943
03/31/2013	<.0943	<.0943	<.0943	<.0943	<.0943	<.0943	<.0943
04/30/2013	No Discharge						
05/31/2013	No Discharge						
06/30/2013	No Discharge						
07/31/2013	<.1	<.1	<.1	<.1	<.1	<.1	<.1
08/31/2013	No Discharge						
09/30/2013	No Discharge						
10/31/2013	No Discharge						
11/30/2013	No Discharge						
12/31/2013							
2006 Permit Limits	**Sum of Group I PAHs <10**						
Minimum	.	.	.	.	.	.	.
Maximum	.	.	.	.	.	.	0.1
Average	NA	NA	NA	NA	NA	NA	NA
# of measurements	44	44	44	44	44	44	44

. = Pollutant not detected above laboratory PQLs; when provided in DMRs, the PQLs are noted as <PQL for the analyte for the date of analysis
--- = Data not available
Average calculated using only detected values
NA = not applicable

SUNOCO - MA0004006
Outfall Serial Number 002
Monthly Reporting – Group II PAHs

Monitoring Period End Date	Acenaphthene (µg/L)	Acenaphthylene (µg/L)	Anthracene (µg/L)	Benzo(g,h,i) perylene (µg/L)	Fluoranthene (µg/L)	Fluorene (µg/L)	Naphthalene (µg/L)	Phenanthrene (µg/L)	Pyrene (µg/L)
	Daily Max	Daily Max	Daily Max	Daily Max	Daily Max	Daily Max	Daily Max	Daily Max	Daily Max
01/31/2009	.	.	.	.	.	.	.	.	.
02/28/2009	.	.	.	.	.	.	.	.	.
03/31/2009	.	.	.	.	.	.	.	.	.
04/30/2009	.	.	.	.	.	.	.	.	.
05/31/2009	.	.	.	.	.	.	.	.	.
06/30/2009	.	.	.	.	.	.	.	.	.
07/31/2009	.	.	.	.	.	.	.	.	.
08/31/2009	.	.	.	.	.	.	.	.	.
09/30/2009	.	.	.	.	.	.	.	.044	.
10/31/2009	.	.	.	.	.	.	.	.	.
11/30/2009	.	.	.	.	.	.	.	.	.
12/31/2009	.	.	.	.	.	.	.	.	.
01/31/2010	.	.	.	.	.	.	.	.	.
02/28/2010	.	.	.	.	.	.	.	.	.
03/31/2010	.	.	.	.	.	.	.	.	.
04/30/2010	---	---	---	---	---	---	---	---	---
05/31/2010	No Discharge								
06/30/2010	---	---	---	---	---	---	---	---	---
07/31/2010	No Discharge								
08/31/2010	No Discharge								
09/30/2010	No Discharge								
10/31/2010	No Discharge								
11/30/2010	<.1	<.1	<.1	<.1	<.1	<.1	<.1	<.05	<.1
12/31/2010	No Discharge								
01/31/2011	<.1	<.1	<.1	<.1	<.1	<.1	<.1	<.05	<.1
02/28/2011	<.1	<.1	<.1	<.1	<.1	<.1	<.1	<.05	<.1
03/31/2011	<.1	<.1	<.1	<.1	<.1	<.1	<.1	<.05	<.1
04/30/2011	<1	<.1	<.1	<.1	<.1	<.1	<.1	<.05	<.1
05/31/2011	<.1	<.1	<.1	<.1	<.1	<.1	<.1	<.051	.11
06/30/2011	<.1	<.1	<.1	<.1	<.1	<.1	<.1	<.05	<.1
07/31/2011	<.1	<.1	<.1	<.1	<.1	<.1	<.1	.075	<.1
08/31/2011	<.1	<.1	<.1	<.1	<.1	<.1	<.1	<.05	<.1
09/30/2011	<.1	<.1	<.1	<.1	<.1	<.1	<.1	<.051	<.1
10/31/2011	<.1	<.1	<.1	<.1	<.1	<.1	<.1	<.05	<.1
11/30/2011	<.1	<.1	<.1	<.1	<.1	<.1	11.4	<.05	<.1
12/31/2011	<.1	<.1	<.1	<.1	<.1	<.1	<.1	<.05	<.1

01/31/2012	<.0943	<.0943	<.0943	<.0943	<.0943	<.0943	<.0943	<.0943	<.0943
02/29/2012	<.0952	<.0952	<.0952	<.0952	<.0952	<.0952	<.0952	<.0952	<.0952
03/31/2012	<.0952	<.0952	<.0952	<.0952	<.0952	<.0952	<.0952	<.0952	<.0952
04/30/2012	<.0943	<.0943	<.0943	<.0943	<.0943	<.0943	<.0943	<.0943	<.0943
05/31/2012	<.0952	<.0952	<.0952	<.0952	<.0952	<.0952	<.0952	<.0952	<.0952
06/30/2012	<.0943	<.0943	<.0943	<.0943	<.0943	<.0943	<.0943	.0472	<.0943
07/31/2012	<.0952	<.0952	<.0952	<.0952	<.0952	<.0952	<.0481	<.0952	<.0952
08/31/2012	<.097	<.0971	<.0971	<.0971	<.0971	<.0971	<.0971	<.0971	<.0971
09/30/2012	<.0952	<.0952	<.0952	<.0952	<.0952	.0453*	<.0952	.21	<.0952
10/31/2012	<.098	<.098	<.098	<.098	<.098	<.098	<.098	.109	<.098
11/30/2012	<.0943	<.0943	<.0943	<.0943	<.0943	<.0943	<.0943	<.0943	<.0943
12/31/2012	<.0952	<.0952	<.0952	<.0952	<.0952	<.0952	<.0952	<.0952	<.0952
01/31/2013	<.0943	<.0943	<.0943	<.0943	<.0943	<.0943	<.0943	<.0943	<.0943
02/28/2013	<.0943	<.0943	<.0943	<.0943	<.0943	<.0943	<.0943	<.0943	<.0943
03/31/2013	<.0943	<.0943	<.0943	<.0943	<.0943	<.0943	<.0943	<.0943	<.0943
04/30/2013	No Discharge								
05/31/2013	No Discharge								
06/30/2013	No Discharge								
07/31/2013	<.1	<.1	<.1	<.1	<.1	<.1	<.1	<.1	<.1
08/31/2013	No Discharge								
09/30/2013	No Discharge								
10/31/2013	No Discharge								
11/30/2013	No Discharge								
12/31/2013									
2006 Permit Limits	**Sum of Group II PAHs <100**								
Minimum	.	.	.	.	.	.	.	.	.
Maximum	.	.	.	.	.	0.0453	11.4	0.21	0.11
Average	NA	NA	NA	NA	NA	NA	NA	0.097	NA
# of measurements	44	44	44	44	44	44	44	44	44

. = Pollutant not detected above laboratory PQLs; when provided in DMRs, the PQLs are noted as <PQL for the analyte for the date of analysis
--- = Data not available
Average calculated using only detected values
NA = not applicable
* = The result shown is an estimated value since it is below the laboratory PQL

SUNOCO - MA0004006
Outfall Serial Number 002
Monthly Reporting – VOCs

Monitoring Period End Date	Benzene	Toluene	Ethylbenzene	Total Xylenes	BTEX	Methyl-tertiary-Butyl-Ether
	Daily Max	Daily Max	Daily Max	Daily Max	Daily Max	Daily Max
01/31/2009	.	.	.	.	.	10.
02/28/2009	.	.	.	.	.	20.8
03/31/2009	.	.	.	.	.	21.3
04/30/2009	.	.	.	.	.	.
05/31/2009	.	.	.	.	.	.
06/30/2009	.	.	.	.	.	.
07/31/2009	.	.	.	.	.	.
08/31/2009	.	.	.	.	.	.91*
09/30/2009	.	.	.	.	.	6.3
10/31/2009	.	.	.	.	.	.
11/30/2009	.	.	.	.	.	.
12/31/2009	.	.	.	.	.	.
01/31/2010	.	.	.	.	.	.
02/28/2010	.	.	.	.	.	.
03/31/2010	.	.	.	.	.	3.8
04/30/2010	---	---	---	---	---	---
05/31/2010	No Discharge					
06/30/2010	---	---	---	---	---	---
07/31/2010	No Discharge					
08/31/2010	No Discharge					
09/30/2010	No Discharge					
10/31/2010	No Discharge					
11/30/2010	---	<1	---	<1	---	---
12/31/2010	No Discharge					
01/31/2011	<.5	<1	<1	<1	<3.5	<1
02/28/2011	<.5	<1	<1	<1	<3.5	<1
03/31/2011	<.5	<1	<1	<1	<3.5	<1
04/30/2011	<.5	<1	<1	<1	<3.5	<1
05/31/2011	<.5	<1	<1	<1	<3.5	<1
06/30/2011	<.5	<1	<1	<1	<3.5	<1
07/31/2011	<.5	<1	<1	<1	<3.5	<1
08/31/2011	<.5	<1	<1	<1	<3.5	<1
09/30/2011	<.5	<1	<1	<1	<3.5	<1
10/31/2011	<.5	<1	<1	<1	<3.5	<1
11/30/2011	<.5	<1	<1	<1	<3.5	<1
12/31/2011	<.5	<1	<1	1	1	<1
01/31/2012	<1	<1	<1	<2	<5	<1

02/29/2012	<1	<1	<1	<2	<5	<1
03/31/2012	<1	<1	<1	<2	<5	<1
04/30/2012	<1	<1	<1	<2	<5	<1
05/31/2012	<1	<1	<1	<2	<5	<1
06/30/2012	<1	<1	<1	<2	<5	<1
07/31/2012	<1	<1	<1	<2	<5	<1
08/31/2012	<1	<1	<1	<2	<6	<1
09/30/2012	<1	<1	<1	<2	<5	<1
10/31/2012	<1	<1	<1	<2	<5	<1
11/30/2012	<1	<1	<1	<2	<5	<1
12/31/2012	<1	<1	<1	<2	<5	<1
01/31/2013	<1	<1	<1	<2	<5	<1
02/28/2013	<1	<1	<1	<2	<5	<1
03/31/2013	<1	<1	<1	<2	<5	<1
04/30/2013	No Discharge					
05/31/2013	No Discharge					
06/30/2013	No Discharge					
07/31/2013	<1	<1	<1	<2	<5	<1
08/31/2013	No Discharge					
09/30/2013	No Discharge					
10/31/2013	No Discharge					
11/30/2013	No Discharge					
12/31/2013						
2006 Permit Limits	**5**	**Report**	**Report**	**Report**	**Sum of BTEX <100**	**70**
Minimum	.	.	.	.	.	.
Maximum	.	.	.	1	1	21.3
Average	NA	NA	NA	NA	NA	1.47
# of measurements	43	44	43	44	43	43

. = Pollutant not detected above laboratory PQLs; when provided in DMRs, the PQLs are noted as <PQL for the analyte for the date of analysis
--- = Data not available
Average calculated using only detected values
NA = not applicable
* = The result shown is an estimated value since it is below the laboratory PQL

Attachment 4: Sunoco East Boston Terminal Process Flow Diagram

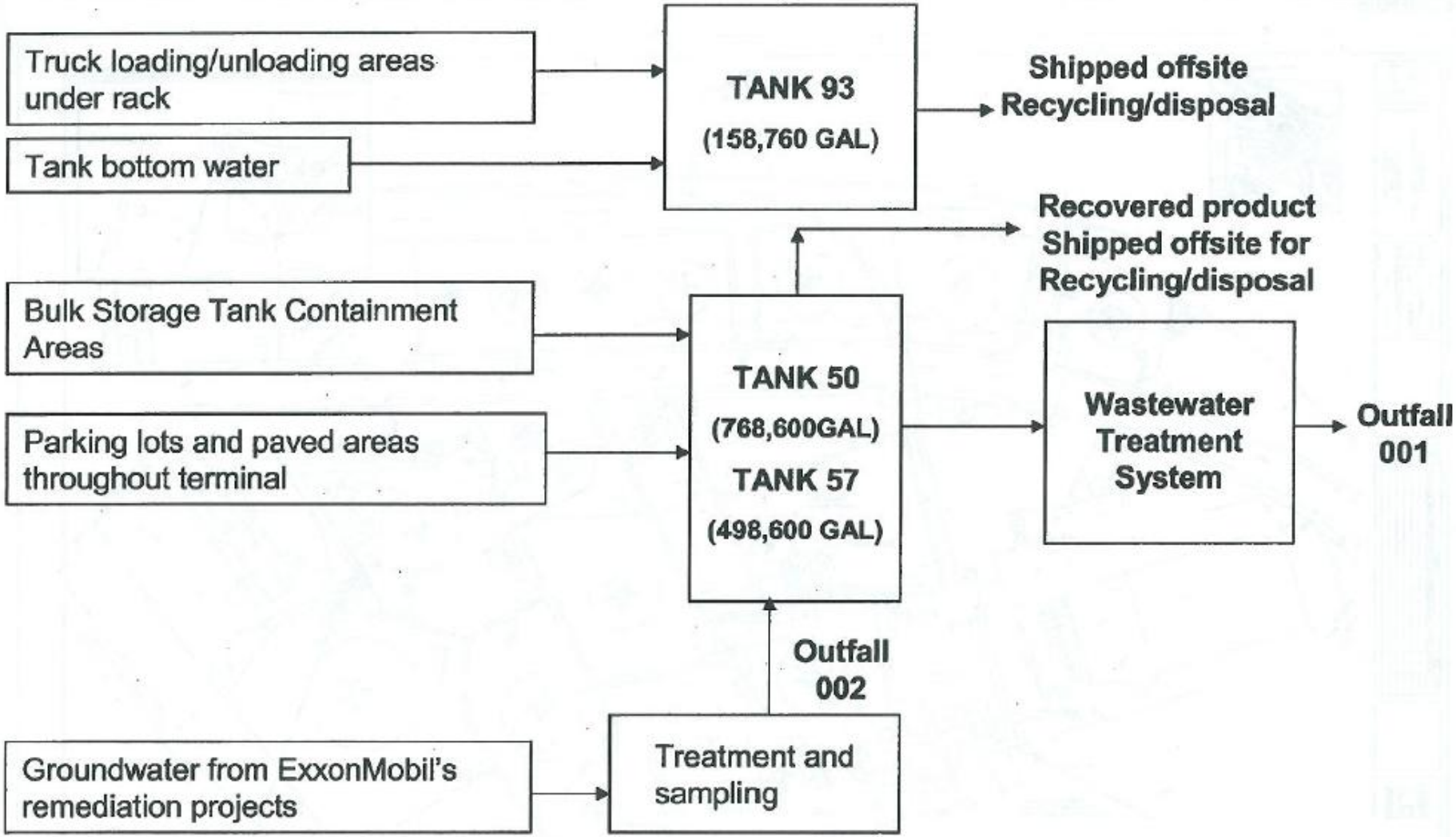

Attachment 5: Sunoco East Boston Terminal Storm Water Treatment System

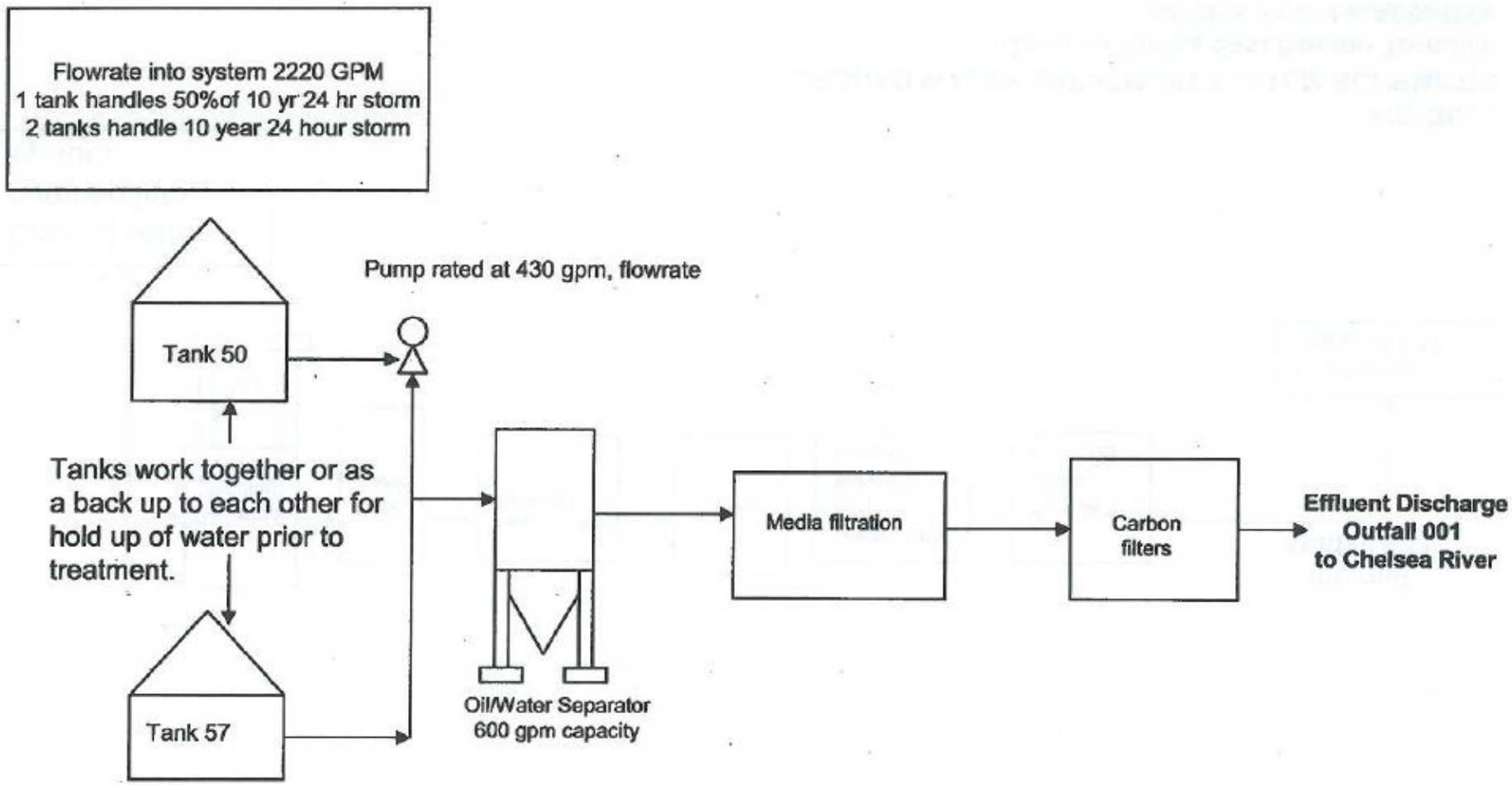

Attachment 6: Sunoco East Boston Terminal Ground Water Treatment System

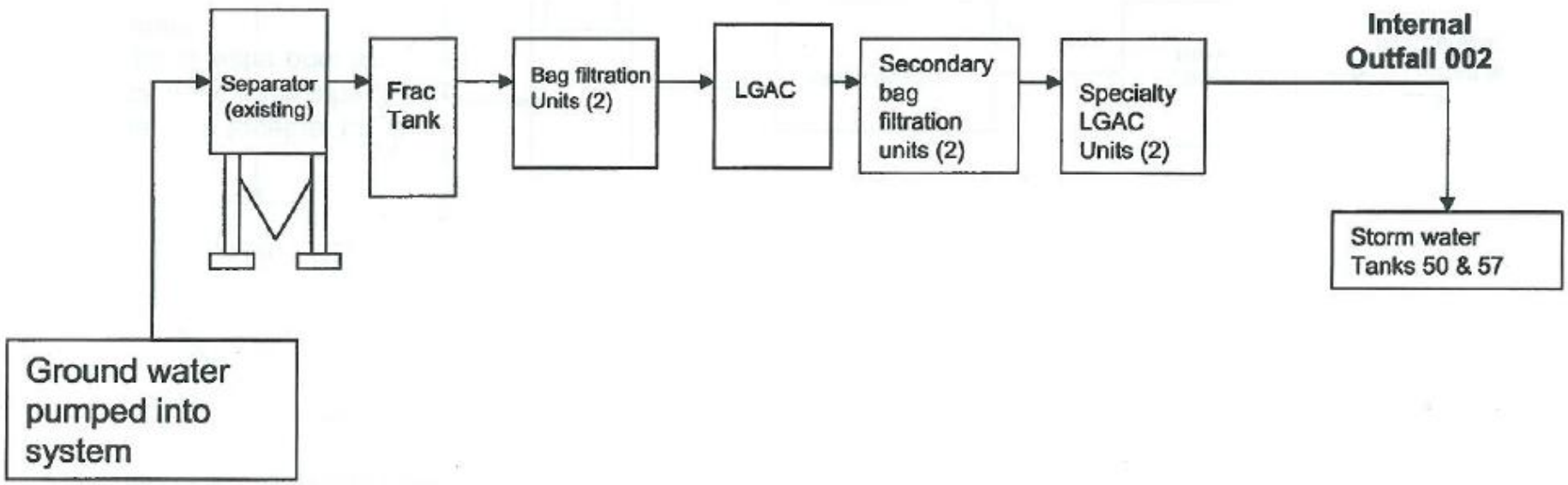

Attachment 7: Summary of Essential Fish Habitat Designations

Name of Estuary/ Bay/ River: Boston Harbor, Massachusetts

10’ x 10’ Square Coordinates:

Boundary Coordinate	North	East	South	West
	42°30.0’ N	71°00.0’ W	42°20.0’ N	71°10.0’ W

Square Description (i.e. habitat, landmarks, coastline markers):

Waters within the Atlantic Ocean within the square within Massachusetts Bay and within Boston Harbor affecting the following: South Boston, MA., Boston, MA., Chelsea River, Mystic River, Charles River, East Boston, MA., Chelsea, MA., Orient Heights, and most of Logan Airport.

Species	Eggs	Larvae	Juveniles	Adults
Atlantic cod *(Gadus morhua)*	X	X	X	X
haddock *(Melanogrammus aeglefinus)*	X	X		
pollock *(Pollachius virens)*	X	X	X	X
whiting *(Merluccius bilinearis)*	X	X	X	X
offshore hake *(Merluccius albidus)*				
red hake *(Urophycis chuss)*	X	X	X	X
white hake *(Urophycis tenuis)*	X	X	X	X
redfish *(Sebastes fasciatus)*	n/a			
witch flounder *(Glyptocephalus cynoglossus)*				
winter flounder *(Pseudopleuronectes americanus)*	X	X	X	X
yellowtail flounder *(Limanda ferruginea)*	X	X	X	X
windowpane flounder *(Scophthalmus aquosus)*	X	X	X	X
American plaice *(Hippoglossoides platessoides)*	X	X	X	X
ocean pout *(Macrozoarces americanus)*	X	X	X	X
Atlantic halibut *(Hippoglossus hippoglossus)*	X	X	X	X
Atlantic sea scallop *(Placopecten magellanicus)*	X	X	X	X
Atlantic sea herring *(Clupea harengus)*		X	X	X
monkfish *(Lophius americanus)*				
bluefish *(Pomatomus saltatrix)*				
long finned squid *(Loligo pealeii)*	n/a	n/a	X	X
short finned squid *(Illex illecebrosus)*	n/a	n/a	X	X
Atlantic butterfish *(Peprilus triacanthus)*	X	X	X	X
Atlantic mackerel *(Scomber scombrus)*	X	X	X	X
summer flounder *(Paralichthys dentatus)*				X

scup *(Stenotomus chrysops)*	n/a	n/a	X	X
black sea bass *(Centropristis striata)*	n/a		X	X
surf clam *(Spisula solidissima)*	n/a	n/a	X	X
ocean quahog *(Artica islandica)*	n/a	n/a		
spiny dogfish *(Squalus acanthias)*	n/a	n/a		
tilefish *(Lopholatilus chamaeleonticeps)*				
bluefin tuna *(Thunnus thynnus)*			X	X

n/a = The species does not have this lifestage in its life history, or has no EFH designation for this lifestage.

Source: http://www.nero.noaa.gov/hcd/webintro.html

Response to Public Comments

In accordance with the provisions of 40 Code of Federal Regulations ("C.F.R.") §124.17, this document presents EPA's responses to comments received on the following draft National Pollutant Discharge Elimination System ("NPDES") permits:

Chelsea Sandwich Terminal (#MA0003280)
Global REVCO Terminal (#MA0003298)
Global Petroleum Terminal (#MA0003425)
Global South Terminal (#MA0000825)
Gulf Oil Terminal (#MA0001091)
Irving Oil Terminal (#MA0001929)
Sunoco Logistics Terminal (#MA0004006)

The response to comments explains and supports the EPA determinations that form the basis of the final permits. From March 14, 2014 to May 12, 2014, the United States Environmental Protection Agency ("EPA") and the Massachusetts Department of Environmental Protection ("MassDEP") (together, the "Agencies") solicited public comments for the re-issuance of draft NPDES permits for the seven terminals identified above. In addition, a joint public information meeting and public hearing was held for interested members of the community in Chelsea, Massachusetts on April 17, 2014.

The draft NPDES permits, developed pursuant to individual permit applications submitted by each of the terminals identified above, authorize the discharge of treated stormwater and hydrostatic test water. The Chelsea Sandwich Terminal, Global Petroleum Terminal, and Sunoco Logistics Terminal also discharge treated groundwater. Further, the Chelsea Sandwich Terminal discharges boiler blowdown. All of the terminals discharge to the Chelsea River. However, the Global REVCO Terminal also discharges to Sales Creek, a tributary of Belle Isle Inlet.

After a review of the comments received, EPA and MassDEP have made a final decision to issue these permits authorizing these discharges. The final permits are substantially similar to the draft permits that were available for public comment.

Although EPA's decision-making process has benefitted from the comments and additional information submitted, the information and arguments presented did not raise any substantial new questions concerning the permits. EPA did, however, make minor changes in response to comments which are summarized in Attachment 1. The analyses underlying these changes are explained in the responses to individual comments that follow and are reflected in the final permits. Comments, received in writing and/or submitted during the public hearing, are organized into three sections: Part I addresses comments submitted which pertain to all seven draft NPDES permits; Part II addresses comments submitted which pertain to a specific individual draft permit; and Part III addresses comments received on the Environmental Justice Analysis ("EJA") issued concurrently with the draft permits. Comments may be paraphrased.

Copies of the final permits may be obtained by writing or calling EPA's NPDES Industrial Permits Section (OEP 06-1), Office of Ecosystem Protection, 5 Post Office Square, Suite 100, Boston, MA 02109-3912; Telephone: (617) 918-1989; http://www.epa.gov/region1/npdes/chelseacreekfuelterminals/index.html.

Index

Attachments

Appendices

Public Comments

<u>Part I. Comments submitted on all seven draft permits identified above:</u>

Comment submitted by Jack P. Schwartz, PhD, Annisquam River Marine Fisheries Station, Massachusetts Division of Marine Fisheries:

Comment A1:

Among the seven draft NPDES permits, the concentration units required for metals such as chromium and iron are micrograms per liter while others such as copper, lead, nickel and zinc are milligrams per liter. Please advise if this is in error and if so, which concentration units are correct.

Response to Comment A1:

The draft permits required reporting concentrations of multiple metals. Metals required for the chemical analysis portion of the whole effluent toxicity ("WET") test (Section IV. of Attachment A, Marine Acute Toxicity Test Procedure and Protocol) are most commonly listed in milligrams per liter ("mg/L"). A number of additional metals typical in EPA Region 1's Remediation General Permit ("RGP") are most commonly listed in micrograms per liter ("µg/L") as is the minimum level ("ML") for analysis for each metal, where specified in footnotes for Part I.A. While neither case is a typographical error, EPA has changed all metals concentration units in the final permits to µg/L, to be consistent. These units align with the concentration units typical of EPA's National Recommended Water Quality Criteria and the levels at which these metals would be expected in effluent at the facilities. The change is reflected in Part I.A. of each of the permits, including footnotes, if applicable.

Comments submitted by Ek OngKar Singh Khalsa, Executive Director, Mystic River Watershed Association:

Comment B1:

MyRWA considers these permits particularly important due to the impaired state of Chelsea River due to petroleum hydrocarbons. MyRWA would first like to register its support for the general improvements made to the discharge permits with respect to the addition of analytes, increased sampling requirements and the use of human health WQCs as discharge limitation concentrations for key pollutants.

Response to Comment B1:

EPA notes the comment.

Comment B2:

1. Improved specificity regarding timing of sampling of receiving environment and toxicity testing. The draft permits require that the samples of the receiving water bodies be collected in May and September respectively (the September sampling is required as part of the WET testing), but the language does not specify when in May and September or under what kinds of conditions sampling should occur. The permittees should be required to ensure that the sampling reflects conditions under which discharges would commonly occur. For example, "after the first period of wet weather in May" may be more appropriate. The permit should require that samples be collected on the out-going tide or at low tide in order to characterize as much as possible Chelsea River water quality rather than inputs from Boston Harbor. Furthermore, if all seven facilities were required to sample the river on the same day this would likely provide a more useful data set for EPA and MassDEP to evaluate potential impacts of stormwater discharge on the waterbody.

Response to Comment B2:

Part I.A. of the permits requires sampling of discharges from the facilities to yield data representative of the discharge under authority of Section 308(a) in accordance with 40 C.F.R. §122.41(j), §122.44(i), and §122.48. In addition, the BMP requirement under Part C. Stormwater Pollution Prevention Plan (adjusted to Part C. Non-Numeric Technology-Based Effluent Limitations ("TBELs") in the final permits as defined below) requires the Permittees to document discharge practices that minimize the extent to which discharges from the facilities occur under worst-case conditions in the receiving water, and limits the runoff, run-on and re-entrainment of pollutants. Several requirements are specified, including discharging, and therefore sampling, during an outgoing tide, but not during periods of critical low flow or the stagnation point at low tide or high tide.

Based on the sampling requirements included in the draft permits, receiving water sampling at each facility will allow comparability with each facility's effluent data. However, EPA agrees that more specific requirements for receiving water samples will yield a more representative data set for the conditions of the receiving water and any whole effluent effect. By defining more precise spatial and temporal requirements, the receiving water data will have more comparability for the watershed.

In increasing the specificity of receiving water sample requirements, EPA acknowledges that discharges from the facilities are intermittent. Because discharges consist almost entirely of stormwater, by volume, a prescribed day and time (i.e., point in the tidal stage) for sampling may not always be feasible, since receiving water samples must be collected concurrently with effluent samples. To provide more specificity, EPA has added a definition of a qualifying discharge event. The permits have adjusted receiving water sampling requirements for the pollutant scan and wet test to require sampling the first qualifying event that occurs in each required month. To identify a qualifying event, the permittee may use tide charts to predict when sampling can be conducted. [1] A qualifying event is defined as an outgoing tide at least one hour from both the low and high slack tide. If a measurable discharge does not occur such that concurrent effluent sampling cannot be completed during the first qualifying event of the

[1] National Oceanic and Atmospheric Administration tide prediction chart for Chelsea, Massachusetts: Station ID: 8443725.

required month, the permittee is to sample the next qualifying event. For example, in October 2014, the first qualifying event, assuming a facility discharges, occurs on October 1 between 5:49 and 10:01 am. Because the definition of a qualifying event also applies to discharges, EPA has also revised the discharge practices BMP to specify the tide-related restrictions.

Further, EPA has adjusted the required sampling month for the required pollutant scan from May to April, to better characterize the effect of spring wet weather when pollutant concentrations would be expected to be greater (i.e., early spring following snow and ice melt). EPA has also included coordination of sample timing with the six other bulk terminals, to the extent possible, in the discharge practices BMP. EPA regards this voluntary coordination as an incentive factor to consider on a case-by-case basis under *Interim Guidance for Performance-Based Reduction of NPDES Permit Monitoring Frequencies* in the event monitoring frequency reductions are requested.[2]

Comment B3:

2. Increased frequency of sampling of the receiving waterbody. As discussed above the draft permits require sampling of the receiving waterbodies twice annually. It is recommended that sampling of the receiving water bodies for all analytes included in the permits and the pollutant scan be increased to quarterly. Data regarding pollutant concentration and variability in the receiving water are used by the EPA and MassDEP to develop these and future NPDES permits. The data used by the EPA and MassDEP is determined from the permits' re-issuance applications, monthly discharge monitoring reports (DMRs) and State and Federal Quality Reports.[3] While many of these data are not immediately available for public review, given the 2005 and 2006 permit requirements with respect to frequency of sampling and the parameters included in the past permits, it is reasonable to suspect that the existing data set is very limited and decision-making would be improved by an increase in water chemistry data.

Response to Comment B3:

The receiving water sampling included in the draft permits is included under two different requirements with differing rationale. The receiving water sampling required under the Whole Effluent Toxicity Testing Chemical Analysis is part of the Marine Acute Toxicity Protocol. EPA included the parameters in the permit table so that they would be reported through NetDMR, eliminating duplicative data tabulation efforts. The pollutant scan of the receiving water is explicitly required in accordance with 40 C.F.R. §122.44(d)(1)(vi)(C) where indicator parameters have been used to limit a class of pollutants (i.e., benzo(a)pyrene and naphthalene for polycyclic aromatic hydrocarbons and benzene for volatile organic compounds). Effluent monitoring requirements in NPDES permits are established on a case-by-case basis at a frequency necessary to determine compliance with permit limitations and conditions, and to evaluate the effectiveness of treatment and control measures, and permit limitations. Regulations at 40 C.F.R. 122.44(i)(2) establish a floor, or minimum frequency for monitoring results of no

[2] See EPA 833-B-96-001, April 1996.
[3] Footnote included in comment referred to: Fact Sheet, Draft National Pollutant Discharge Elimination System (NPDES) Permit to Discharge to Waters of the United States pursuant to the Clean Water Act (CWA), NPDES Permit Number MA0003298, p.8

less than once per year. Annual frequency is generally for monitoring only, that is, where a pollutant or parameter does not require a water quality-based effluent limitation ("WQBEL"). A number of factors are considered in establishing a case-by-case monitoring frequency, including effluent variability, the type of treatment provided to the effluent, the type, significance and persistence of the pollutants, the cost of such a monitoring schedule relative to the benefit, and the compliance history of the facility.

In response to this and several comments received, EPA has reconsidered the number of samples for both the effluent and the receiving water necessary to increase the data quality, reduce the standard deviation (i.e., variability), and increase the confidence level of the data set. Over a five-year permit term, annual sampling will yield 5 data points per facility, and 35 data points overall. Over the same term, quarterly sampling will yield 20 data points per facility, and 140 data points overall, while monthly sampling will yield 60 data points per facility, and 420 data points overall, assuming no frequency reductions are allowed.

An expected benefit of an increased monitoring frequency is to better characterize the quality and variability of the effluent and receiving water, which in turn ensures permit compliance. Compliance with new WQBELs derived from human health criteria for pollutants for which the receiving water is impaired and facilities are identified as a source is of significant concern. Additional benefits include an increase in the data quality by increasing the size of the data set for facilities and the receiving water, and increasing sampling for pollutants of identified environmental and human health significance in the watershed. In general, a larger sample size results in a greater confidence level that the sample collected is representative of the actual concentration of a parameter in the effluent at any given time.

Therefore, EPA believes that for the pollutants with WQBELs or requirements, or limits based on human health criteria, initial monitoring frequencies should be increased, as suggested, in the short term. First, the ambient monitoring requirements under Part I.A. Pollutant Scan, Receiving Water are inextricably linked to effluent limitations based on human health criteria, pursuant to 40 C.F.R. §122.44(d)(1)(vi)(C) as ambient monitoring is necessary for EPA to monitor compliance with WQSs. As a result, the receiving water sample for this requirement has been increased to quarterly in the final permits. Second, the ambient monitoring requirements under Part I.A. Whole Effluent Toxicity Testing Chemical Analysis is inextricably linked to Whole Effluent Toxicity testing of the effluent, based on the need to assess acute toxicity in the effluent. As a result, the receiving water sample for this requirement has been increased to quarterly in the final permits. However, given that the characteristics of the effluent in the short term are expected to remain consistent and the cost burden of increased sampling and analysis is high for organic pollutants and whole effluent toxicity, the increased monitoring frequencies are effective for the first three years of the permit term. Three years represents the period of time required for a quarterly sampling frequency to generate the number of samples recommended in EPA's *Technical Support Document for Water Quality-based Toxics Control* for evaluation and analysis. Three years is also an appropriate period for calculating a long term average under EPA's *Interim Guidance for Performance Based Reductions of NPDES Permit Monitoring Frequencies*. After three years, the monitoring frequencies will automatically reduce to once per year. Over a five-year permit term, quarterly sampling for the first three years and annual sampling for an additional two years will yield 14 data points per facility, and 98 data points

overall. The final permits provide permittees the ability to request further reductions in writing, if warranted, which must be granted in writing by EPA and MassDEP.

The list of parameters required for ambient sampling remain those under the pollutant scan, receiving water, and WET testing chemical analysis. These analytes include all parameters limited in all permits, and all parameters with required monitoring, with the exception of select parent oxygenates that are either no longer in use or have a residence time in surface water shorter than is likely to be detected in the receiving water (i.e., EPA requires monitoring for tert-butyl alcohol, a breakdown compound, rather than methyl-tert-butyl-ether ("MtBE"), the parent compound).

Comment B4:

3. Field screening of basic water chemistry parameters prior to discharge. In reviewing the sampling results from the past five years as provided in the Fact Sheets, in some cases discharges were released to Chelsea River with pH values as low as 2.96.[4] It is recommended that field measurements of pH be required prior to discharge to prevent such discharges and prohibit discharges except if the pH value is between 6.5 and 8.5 SU.

Response to Comment B4:

The low pH value referenced above was reported by Gulf Oil Terminal in error. The Permittee utilizes a number of sampling containers, some of which contain preservative chemicals consistent with analytical methods in 40 C.F.R. Part 136. On the January 31, 2012 occasion, pH was not collected in the appropriate sample container and preservative impacted the reported value. EPA advised the Permittee during permit development that in the event of a sampling error, the Permittee should collect additional samples for the purposes of reporting and explain the error.

Rainwater in the New England region as reported by the National Atmospheric Deposition Program is frequently outside the allowable permitted range. However, the surface materials at the terminals which contact rainwater appear to provide a buffering effect prior to the discharge of stormwater, such that pH across the seven facilities only exceeded pH limits 12 times across all samples over the previous five years (approximately 420 samples. Four of seven facilities reported no exceedances, one facility reported one exceedance, one facility reported four exceedances and one facility reported seven exceedances. The final permits, upon request of several permittees, include the allowance for collecting and submitting on-site rainwater samples to determine pH impacts to stormwater prior to accumulation and discharge. This additional provision was added because Massachusetts' Surface Water Quality Standards at 314 Code of Massachusetts Regulations ("C.M.R.") 4.05(4)(b)3, which, in addition to requiring pH to be within the range of 6.5 to 8.5 SU, also prohibits discharges that cause the in-stream pH to change more than 0.2 SU outside of the background range. Acidic rainwater has the potential to impact

[4] Footnote included in comment referred to: Fact Sheet, Draft National Pollutant Discharge Elimination System (NPDES) Permit to Discharge to Waters of the United States pursuant to the Clean Water Act (CWA), NPDES Permit Number MA0003298,1091 Attachment 3.

the pH range of surface runoff independent of effluent generated at the facilities. These data allow the facilities to identify such an issue and report it to EPA and MassDEP.

Further, since the pH standard applies instream, EPA does not believe collecting additional pre-discharge measurements of pH will inform compliance. The effluent limitations remain unchanged and any value reported outside of this range is considered a permit limit exceedance. In addition, EPA notes that in the event of a violation of any permit condition, including an exceedance of the numeric limits for pH, the permittees are required to review and potentially revise control measures through corrective action to eliminate such an occurrence. The corrective action requirements were included in the draft permits in Part I.C.1 h-j and by reference in Part I.C.1.a. To provide greater specificity for a portion of the referenced requirements, the final permits include a stand-alone corrective action requirement. The final permits contain these provisions largely verbatim from Part 3. of EPA's current Multi-Sector General Permit (MSGP) (effective May 27, 2009). However, where a provision included in the MSGP is phrased inappropriately for an individual permit or is otherwise unclear, the provision wording has been adjusted. However, provisions remain substantially identical to those abbreviated or included by reference in the draft permits. Provisions included in the MSGP that do not apply to the facilities have been omitted. As the corrective action requirements in EPA's MSGP are more complete than the portion added to the final permits, the references to EPA's MSGP, remain. The final permits also include the allowance for collection of pH measurements of rainwater if the permittee anticipates or measures effluent outside of the permitted range that the permittee believes is due to rainwater conditions, as allowed under Massachusetts' WQSs.

EPA expects that once the discharges contact ambient water, the effluent will be sufficiently "buffered" such that no change in ambient pH levels will occur due to any of the facilities discharges.

Comment B5:

4. Increased frequency of sampling in the event of a reported exceedance. It is recommended that in the event that a parameter is above or outside of the discharge limitation the facilities be required to sample and analyze all discharges until the parameter once again meets the permit requirements. This data will help characterize the extent of potential impacts of an exceedance as well as identify any systemic failures in the SWPP that need to be addressed.

Response to Comment B5:

Requirements included in the permits address corrective actions as they are required for documentation in the facility's Stormwater Pollution Prevention Plan (SWPPP). Specifically, Part I.C. of the draft permits (adjusted to Part D. Stormwater Pollution Prevention Plan in the final permits as defined below) includes the requirement that the facilities SWPPPs are consistent with the general provisions for SWPPPs included in EPA's Multi-Sector General Permit for discharges of stormwater associated with industrial activity (effective May 27, 2009) included in Part 5 and Part 8.AD., including documentation for corrective actions taken. The corrective action requirements have been moved to Part C. Non-numeric Technology-Based Effluent Limitations and Additional Requirements in the final permits to better distinguish

between limitations and requirements (i.e., non-numeric TBELs, control measures, inspections, and corrective actions) and documentation and certification requirements (i.e., SWPPP).

Further, since the provisions pertaining to control measures, inspections and corrective actions included by reference to EPA's Multi-Sector General Permit in the draft permits are potentially related to an exceedance of a permit effluent limitation, characterization of potential impacts of an exceedance, and/or identification of inadequacies in a facility's SWPPP, EPA has clarified several requirements for control measures, inspections, and corrective actions. Specifically, the control measures included by reference under SWPPP requirements in Part C.1.b-f. in the draft permits and by reference to EPA's MSGP now include the design considerations applicable to Part 8.AD. and, in limited instances, 8.P. of EPA's MSGP in Part C.2. of the final permits. The inspection requirements included under SWPPP requirements in Part C.1.g. of the draft permits have been moved to Part C.5. in the final permits. The control measure requirements abbreviated under SWPPP requirements in Part C.1.h-j. of the draft permits and included by reference to EPA's MSGP, have been moved to Part I.C.7. of the final permits and expanded to include a portion of the referenced provisions. The minimum documentation requirements included by reference to EPA's MSGP for control measures (including Best Management Practices (BMPs)), inspections, and corrective action have been added to Part D.1.d. of the final permits for greater specificity. Since the requirements in EPA's MSGP are more complete than the portions added to the final permits, the references to EPA's MSGP requirements for sector AD, and P, if applicable, as well as the general SWPPP requirements included in Part 5, remain.

EPA believes the monitoring requirements in the permit are sufficient to yield data representative of the variability expected in the effluent. However, based on the commenter's suggestions, EPA is including more specific language from the provisions in the MSGP SWPPP Corrective Actions section to ensure that corrective actions are implemented and documented properly in the facilities' SWPPPs and the non-numeric TBELs in the permits are met. For additional clarification, the non-numeric TBELs have been separated from the SWPPP as described in Response to Comment B6, below.

The EPA NPDES permitting program does not typically include automatic, additional monitoring in NPDES permits once a limit is exceeded. However, it is possible that EPA's compliance program could require additional or ongoing monitoring if permit limit exceedances occur.

Comment B6:

5. Improved public access to the Stormwater Pollution Prevention Plans (SWPPPs) and Discharge Monitoring Reports (DMRs). MyRWA requests that the SWPPPs be submitted to EPA for approval, made available electronically upon request, and that the DMRs also be made available electronically upon request one year after the effective date of the permit.

Response to Comment B6:

The SWPPP itself does not contain numeric effluent limitations. The SWPPP is intended to document the selection, design, and installation of control measures. These measures are selected

by permittees from a large variety of widely used and effective engineering practices. As distinct from the limitations, the documentation requirements are intended to document the implementation (including inspections, control measures, monitoring, and corrective actions) of the permit requirements. To clarify the distinction between the permit conditions and the documentation through a SWPPP, EPA has divided the Stormwater Pollution Prevention Plan part (Part C.) into two parts. Part C. Non-numeric Technology-Based Effluent Limitations and Additional Requirements, includes the non-numeric TBELs, control measures, inspections and corrective action requirements, and Part D. Stormwater Pollution Prevention Plan includes the documentation and certification requirements for the SWPPP.

Given the distinction between the limitations and the documentation requirements, EPA required in the draft permits that SWPPPs be developed, but not submitted to EPA unless requested. EPA continues to believe approval of a facility's SWPPP is not necessary to ensure the facilities are meeting their non-numeric TBELs as the SWPPP serves as the record of the activities completed to meet the effluent limitations and requirements in the permits. The elements of the SWPPPs required in the permit are significantly identical to those required of facilities discharging stormwater associated with industrial activity, covered under EPA's MSGP. Similarly, SWPPPs prepared under the MSGP are not submitted to EPA for approval. EPA does not believe the stormwater discharges from these facilities differs from the much larger body of permitted facilities under EPA's MSGP, such that EPA should approve a SWPPP in the instance of these facilities.

Nevertheless, EPA is committed to transparency and public accountability regarding compliance and enforcement performance for these facilities. The draft permits included the requirement that the permittees submit copies of their SWPPPs to the municipality in which they are located and to submit Discharge Monitoring Reports (DMRs) to EPA and MassDEP to allow members of the public to access these documents. The final permits further require that the permittees post a copy of the facility's Stormwater Pollution Prevention Plan (including its annual certifications, updates and BMP implementation documentation) and discharge monitoring data (including any reports) to their respective company's publicly-accessible internet webpage if practicable. If a permittee determines this requirement is impracticable, EPA anticipates requesting copies of SWPPPs be submitted to EPA for posting via its website. DMR data will remain accessible through EPA's Enforcement and Compliance History Online ("ECHO") website.[5] Since the SWPPP and DMR data become public record when submitted to the municipalities and/or Agencies, this requirement serves only to allow ease of access for interested persons. This requirement is within the Agency's discretion under Clean Water Act Sections 402(a) and 308(a). Sections 402(a) provides that: "The Administrator shall prescribe conditions for permits to assure compliance…including conditions on data and information collection, reporting, and such other requirements as he deems appropriate." Section 308(a) authorizes the Agency to require owners/operators to "make such reports" and "provide such other information as [the Administrator] may reasonably require." This requirement advances Clean Water Act goals by increasing public awareness through public web reporting and thereby improving compliance by providing companies with greater incentive to comply with their permits. If the permittee deems this requirement impracticable, alternatively, the information will be requested by EPA and becomes available at the Region 1 EPA office.

[5] Currently accessed at: http://www.epa-echo.gov/echo/

Also see Response to Comment C2 and Response to Comment H1.

Comment B7:

6. Clarification regarding sampling timing during discharge event. The Draft Permits stipulate that "all [effluent] samples shall be grab samples taken within 15 minutes of the initiation of discharge from the outfall where practicable, but in no case later than within the first hour of discharge from the outfall". Can the EPA confirm that such a sampling routine will provide the highest concentrations of pollutants given the configuration of all of the stormwater management facilities and the characteristics of the water quality parameters? For example, are there facilities that discharge from the bottom of a tank/reservoir that would yield the highest concentrations of lightweight pollutants such as VOCs near the end of the discharge event?

Response to Comment B7:

EPA believes sample collection within the first 15 minutes of the initiation of discharge will yield data representative of the effluent after treatment for comparison to the effluent limitations. EPA required sampling within the first fifteen minutes of the initiation of discharge to capture a representation of effluent quality, but is likely to capture higher than average concentrations. Where a daily maximum limit applies, this does not necessarily equate to a maximum instantaneous limit (i.e., the highest possible concentration). When a daily maximum limit is an acute criteria, it is based on an averaging period, typically of four hours. The limits for many of the organic compounds in the permits are monthly average, for which an instantaneous maximum has even less comparability, as the averaging period is longer still.

The facilities also typically do not retain stormwater in enclosed vessels, where phase separation is more likely. The transfer of effluent is such that pollutants which may undergo phase separation while in storage, remix upon transfer through the facilities' stormwater conveyance and treatment systems prior to discharge. Lightweight pollutants such as volatile organic compounds are of greater concern in tank bottom/bilge water and hydrostatic test water effluent. To ensure lighter phase pollutants are not discharged at concentrations that would exceed permit effluent limitations, EPA specifically prohibited discharges of tank bottom/bilge water and included expanded sampling requirements specific to hydrostatic test water discharges, including sampling near the end of a tank discharge, where lightweight pollutants are more likely present. For facilities that discharge groundwater remediation effluent, the groundwater treatment systems extract groundwater, treat groundwater and discharge treated groundwater in series. This batch process method of treatment is not likely to promote phase separation (e.g., individual lighter pollutants separate from the blended liquid and migrate to the top of the batch water column) as groundwater is treated upon extraction from groundwater extraction wells. Finally, for the facility that discharges boiler blowdown, lightweight pollutants are not expected to be present.

Given the concern for phase separation and in consideration of additional comments (see Comments L6, M8, N6, O6, and R2 in Part II, below) received regarding the necessity of certain samples in the hydrostatic test process, EPA has modified the requirements for hydrostatic test

water discharges such that sampling must occur during the first 10%, mid-point and last 10% of the discharge after treatment, rather than in-process prior to treatment (also see Response to Comment R2). EPA believes this sampling adjustment will yield data which are better representative of any potential phase separation and will better quantify any variability in hydrostatic test water discharges. In revising the requirements for hydrostatic test water sampling, EPA noted that monitoring for total recoverable chromium was inadvertently omitted from the list of parameters for three of seven permits: Irving Oil Terminal, Global Petroleum Terminal and Sunoco Logistics Terminal. Total recoverable chromium is described in each permits' fact sheet Part 7.6, Hydrostatic Testing. This parameter has been added to the hydrostatic test water sampling requirements in the final permits.

Comment B8:

7. Increased frequency of EPA and DEP unannounced inspections. At least one annual inspection of each petroleum terminal is necessary to review the facility compliance status.

Response to Comment B8:

EPA understands that a comprehensive and robust compliance and enforcement program is a critical component of an effective NPDES program. EPA uses a number of mechanisms, including inspections, to ensure compliance with the permits. Inspections of facilities with NPDES permits are performed by EPA Region 1's Office of Environmental Stewardship. EPA's Office of Site Remediation and Restoration also regularly inspects the bulk fuel storage facilities for their compliance with the Oil Pollution Act. Additionally, these facilities are inspected by MassDEP. EPA's inspection frequency depends on such factors as the regulatory requirements of the program, the compliance history of the facility, the EPA resources available to perform inspections and the extent of competing environmental priorities. Monitoring results are reviewed with the goal of prioritizing inspections as well as for resolving any violations identified in a timely manner. EPA attempts to take all of the above factors into account when developing an appropriate inspection frequency. The inspections conducted by EPA include both announced and unannounced inspections. Depending upon the specific circumstances of an inspection, the permittee may or may not be notified prior to the inspection. Each agency and program uses different criteria to determine the most appropriate type of inspection.

In addition, the draft permits required qualified personnel to conduct quarterly facility inspections and maintain documentation regarding inspection activities as part of the facility's Stormwater Pollution Prevention Plan. The draft permits also included by reference, the control measures and corrective actions required for the applicable sectors in EPA's MSGP. Certain corrective actions are required of the facility as a result of routine inspection, including when control measures are identified as inadequate to meet the non-numeric TBELs and additional requirements (i.e., control measures, facility inspections and corrective actions). As explained in Response to Comment B6, to provide greater specificity with regard to quarterly inspections, control measures and corrective actions, EPA has separated these requirements from the SWPPP, instead including them in Part C. Non-numeric Technology-based Effluent Limitations and Additional Requirements. In addition, as explained in Response to Comment B5, several provisions pertaining to control measures, inspections, and corrective actions included in the

draft permits largely by reference to EPA's MSGP have been specifically incorporated into the final permits to provide greater clarity.

Comments submitted by Staci Rubin, Senior Attorney, Environmental Justice Legal Services Director, Alternatives for Community & Environment, Inc., on behalf of residents of Chelsea and East Boston[6]

Comment C1:

This comment letter is filed on behalf of residents of Chelsea and East Boston whom Alternatives for Community & Environment ("ACE") is assisting in the matter of draft permits for the seven bulk petroleum storage facilities along the Chelsea River.

As explained in detail in these comments, the EPA should deny all seven bulk petroleum terminals National Pollutant Discharge Elimination System ("NPDES") permits because: (1) the draft permits were issued prior to establishment of Total Maximum Daily Loads for the Chelsea River and Sales Creek; (2) the draft permits do not consider climate change/disruption/warming conditions; and (3) the cumulative impacts of releases from all seven petroleum terminals were not adequately analyzed as required by the Executive Order on Environmental Justice. If the agencies disagree with these comments and decide to issue final permits, the residents request several conditions be added to the final permits for all seven facilities as discussed below.

Response to Comment C1:

The prohibitions applicable to the issuance of NPDES permits by EPA are contained in 40 C.F.R. §122.4. Neither a lack of a Total Maximum Daily Load nor failure to consider climate change/disruption/warming conditions are cited as reasons for prohibiting the issuance of NPDES permits. Additionally, 40 C.F.R. §122.64 outlines causes for NPDES permit termination or denial of a permit renewal application. EPA notes that: 1) the lack of a total maximum daily load ("TMDL"); 2) failure to consider climate change; and 3) failure to adequately consider cumulative impacts under the Executive Order on Environmental Justice do not explicitly appear among the list of causes for permit termination or re-application denial under these regulations. Moreover, based on the numeric and non-numeric effluent limitations and requirements included in the permits, EPA believes that the permits provide for compliance with applicable requirements of the Clean Water Act and ensure compliance with Massachusetts Surface Water Quality Standards (Massachusetts' "WQSs"). Furthermore, EPA expects that the State will certify the permits under Section 401 of the Clean Water Act. Therefore, no prohibition noted in these implementing regulations warrants denial of the NPDES permit reissuance.

Further explanation regarding the TMDL for Chelsea River and consideration of climate change are provided in response to Comment C2 and Response to Comment C3, respectively.

[6] Footnote included in comment referred to: Roseann Bongiovanni, Judith Dyer, Maura Garrity, Paula Garrity, John Kennard, Sue Ladr, Catherine Maas, Sharlene McLean, and David Prusky, residents of Chelsea; Leigh Hall, Chris Marchi, Gail Miller, and Anjie Preston, residents of East Boston.

With regard to the permit reissuances to these facilities and Executive Order 12898 (59 Fed. Reg. 7629, February 11, 1994), entitled "Federal Actions to Address Environmental Justice in Minority Populations and Low-Income Populations", each federal agency is required to "make achieving environmental justice part of its mission by identifying and addressing, as appropriate, disproportionately high and adverse human health or environmental effects of its programs, policies, and activities on minority populations and low-income populations in the United States. . . ." Executive Order 12898, § 1-101. As noted in the permits' fact sheets, EPA thoroughly considered environmental justice issues in the development of the draft permits, including review of data evaluated for an EJA. Whether addressing adverse impacts is appropriate or actionable by EPA is dependent upon the existing environmental laws and their implementing regulations governing EPA's authorities. EPA believes it has used its authority under the Clean Water Act section 402(a) to incorporate limitations connected to water quality impacts or technology-based limitations that address environmental justice concerns documented in the EJA.

Executive Order 12898 itself is not a source of authority. As noted by the Environmental Appeals Board, the Executive Order does not "amend EPA's statutory or regulatory requirements and obligations. The Executive Order emphasizes that all of its directives to agencies are to be implemented '[t]o the greatest extent practicable and permitted by law.' Further, the Order concludes by stating that '[t]his order is intended only to improve the internal management of the executive branch and is not intended to, nor does it create, any right, benefit, or trust responsibility, substantive or procedural, enforceable at law or equity by a party against the United States, it agencies, its officers, or any persons'".[7] As the EPA has recently explained, "the only legal requirements applicable to EPA regional offices and permit applicants throughout the permitting process are those contained in the EPA's environmental statutes, implementing regulations, the Administrative Procedure Act, applicable anti-discrimination laws and other applicable statutes and regulations."[8] In short, the Executive Order grants no additional authority to EPA; any denial of a permit application (or renewal) must be in accordance with applicable laws and regulations, including the Clean Water Act. Moreover, in this instance, the Clean Water Act does not appear to provide any general authority to deny permits based on environmental justice considerations that are unconnected to water quality impacts or technology-based limitations.[9]

With regard to cumulative impacts, Section 3-3 of the Executive Order, titled "Research, Data Collection, and Analysis", sub-section 3-301, titled "Human Health and Environmental Research and Analysis" states, "[e]nvironmental human health analyses, whenever practicable and appropriate, shall identify multiple and cumulative exposures." The *National Recommended Water Quality Criteria* used to calculate numeric effluent limitations in the permits are derived in consideration of acceptable levels of risk for a receptor through water-related exposure routes. These criteria have been promulgated by both EPA and MassDEP. For certain petroleum hydrocarbon indicator parameters (e.g., benzene, and benzo(a)pyrene) EPA selected the human

---

[7] In re Sierra Pacific Indus., PSD Appeal Nos. 13-01 through 13-04, slip op. at 31-32 (EAB July 18, 2013) quoting Executive Order 12898, §§ 1-101, 6-609.

[8] EPA Activities to Promote Environmental Justice in the Permit Application Process, 78 Fed. Reg. 27220, 27221 (May 9, 2013).

[9] See Memorandum from Gary S. Guzy, EPA General Counsel (Dec. 1, 2000), *available at*, http://www.epa.gov/environmentaljustice/resources/policy/ej_permitting_authorities_memo_120100.pdf.

health criteria based on exposure through fish consumption. Any human health criterion for a toxicant is based on at least three interrelated considerations: 1) cancer potency or systemic toxicity; 2) exposure; and 3) risk characterization.[10]

EPA considered cumulative impacts, addressed interchangeably as cumulative effects, as EPA policy and guidance prescribes in the context of NPDES permits. Cumulative impacts in this context are considered the combined impacts to water quality of a receiving water from aggregate contributions of one or more pollutants, including any impacts in combination. A cumulative impact analysis, in the same context, is an analysis, characterization, and possible quantification of the combined impacts to human health or the environment from aggregate contributions of one or more pollutants, including any impacts in combination. One key aspect of this definition is that a cumulative impact analysis need not necessarily be quantitative. Therefore, under the scope of the Clean Water Act, EPA's approach considered the data available, the nature of the water quality concerns, the sources of pollutants and their characteristics, and the relationships among those sources following EPA guidance. As explained more thoroughly in the permits' fact sheets, EPA, in developing the effluent limitations and monitoring requirements for the reissuance of the seven permits, considered cumulative effects of the loading of pollutants to the receiving water, including additive and/or synergistic effects. EPA considered each facility as a point source in the context of other point sources, including the six other facilities, and non-point sources as they can be discerned using available receiving water data, and the physical and chemical conditions of the receiving water.

In setting effluent limitations, EPA typically adheres to the guidance in EPA's *Technical Support Document for Water Quality-based Toxics Control*,[11] and EPA's *NPDES Permit Writers' Manual*.[12] EPA has addressed relevant aspects of cumulative exposure and potential impacts in the context of this permitting action consistent with the *Technical Support Document for Water Quality-based Toxics Control* as described below.

EPA follows the guidance in *Technical Support Document for Water Quality-based Toxics Control* to determine if any pollutant or pollutant parameter (conventional, non-conventional, and toxic) that is or may be discharged causes or has the "reasonable potential" to cause or contribute to an excursion above any water quality standard (40 C.F.R. §122.44(d)). An excursion occurs if the projected or actual in-stream concentration exceeds an applicable water quality criterion. In determining "reasonable potential," EPA considers:

1. Existing controls on point and non-point sources of pollution;
2. Pollutant concentration and variability in the effluent and receiving water as determined from the best available information
3. The sensitivity of the indicator species used in toxicity testing, where required;
4. Known water quality impacts of processes on waste waters; and
5. Dilution of the effluent in the receiving water.

[10] See EPA's *Water Quality Standards Handbook, Second Edition,* Chapter 3: Water Quality Criteria (40 CFR 131.11).
[11] EPA/505/2-90-001, March, 1991.
[12] EPA-833-K-10-001, September, 2010.

In a strictly quantitative approach, EPA tabulates available data, determines the applicable water quality criteria and statistically projects concentrations based on available effluent data using a steady state mixing that accounts for the contribution of the discharge, by volume as compared to the receiving water under worst case conditions, and the concentration already present in the receiving water. EPA completed this analysis when available data were sufficient, as was the case for several permits for the oxygenate MtBE. However, significant data gaps were noted which prevented EPA from utilizing specific values for many of the remaining pollutants of concern. EPA's alternative approach to determine reasonable potential given the insufficiency of specific data is given below.

EPA followed the *Technical Support Document for Water Quality-based Toxics Control* in a combined qualitative approach in the absence of effluent data to determine whether there is reasonable potential to cause or contribute to an excursion above any water quality criteria. Given the impairments to the receiving water and the level of concern associated with the pollutants present in the discharges, EPA properly applied a margin of error through application of several assumptions. For example, in addition to pollutants previously monitored by the permittees, EPA identified multiple additional parameters potentially present in the discharges or that could come into contact with discharges at the facilities based on guidance documents and supplemental information detailed in the permits' fact sheets. As explained in the permits' fact sheets, EPA also did not allow a mixing zone in the receiving water. EPA further assumed each chemical-specific parameter already exceeded applicable criteria in the receiving water, in light of the impairments related to petroleum and petroleum hydrocarbons and insufficient data to determine otherwise. In determining whether the discharge would meet water quality standards, EPA assumed each chemical-specific parameter would be discharged by the facilities up to the maximum permitted quantity, and that effluents would exhibit limited variability from the worst case chemical characteristics. Finally, EPA did not account for the intermittent nature of these discharges and that they all do not necessarily discharge at the same time. In the analysis, EPA also considered pollutant parameters with potential additive and/or synergistic effects and relative persistence in environmental fate and transport (e.g., polycyclic aromatic hydrocarbons).

The result of EPA's analyses performed pursuant to the *Technical Support Document for Water Quality-based Toxics Control* determined that several pollutants of concern (or pollutant parameters) are or may be discharged at levels that cause, or have the reasonable potential to cause, or contribute to an excursion above one or more numeric or narrative water quality standards. Anywhere a numeric effluent limitation was derived, the water quality criterion is applied as a limit at the point of discharge.

An additional response regarding the comments submitted pertaining to the cumulative impacts discussed in the EJA are included in Part III.

With regard to changes requested to the final permits for these facilities, refer to Response to Comment C2, below.

Comment C2:

A. The EPA and MassDEP permitting actions should contribute to improved water quality in the Chelsea River and the draft permits were issued improperly.

As the EPA and MassDEP are well aware, there is an anti-backsliding requirement for NPDES permits which means that the requirements of a subsequent permit may not be less stringent than previous permits. The final permits must ensure that discharges from the seven bulk petroleum terminals ("facilities") contribute to improving the quality of the receiving waters. Under the federal and state Clean Water Act, the EPA and MassDEP are required to protect the water resources of the Commonwealth and may grant permits to industrial dischargers only if the discharges will conform to regulations. At present, the draft NPDES permits do not conform to regulations. MassDEP has a broad statutory mandate to protect the waters of the Commonwealth. M.G.L. c. 21, §§26-53. MassDEP is also responsible for enhancing the quality and value of water resources, M.G.L. c. 21, §27, and enforcing the anti-degradation provisions of the surface water quality standards. 314 C.M.R. 4.00.

The Chelsea River water quality is impaired because of pollutants such as petroleum hydrocarbons and other issues. MassDEP's federally-approved water quality standards classify the segment of the Chelsea River in which the facilities are located as Class SB. Class SB waters are described in the Commonwealth of Massachusetts Surface Water Quality Standards (314 C.M.R. 4.05(4)(b)) as follows: "These waters are designated as a habitat for fish, other aquatic life and wildlife, including for their reproduction, migration, growth and other critical functions, and for primary and secondary contact recreation. In certain waters, habitat for fish, other aquatic life and wildlife may include, but is not limited to, seagrass…These waters shall have consistently good aesthetic value."

A Class SB water body means that the water quality should be able to support wading, swimming, fishing, boating and a healthy fish and aquatic life community. Yet, the water course has not achieved this standard. No matter how far away this standard appears, the water quality should improve, notwithstanding combined sewer overflows, sanitary sewer overflows, and marine vessel pollution. The EPA and MassDEP should establish Total Maximum Daily Load ("TMDL") criteria for pollutants in the watercourse, as required by the Clean Water Act, which are essential to achieve the goal of cleaning up the Chelsea River to support recreational opportunities and improved aquatic habitat.

Because the Chelsea River (Segment 71-06) is an impaired water body,[13] permits must not allow the wastewater discharge of additional pollutants that will contribute to further impairment of water quality standards. Under §303 of the federal Clean Water Act, 33 U.S.C. §1313, states are required to set water quality standards for all waters within their boundaries, regardless of the sources of the pollution entering the waters. Pursuant to §303(d)(1), 33 U.S.C. §1313(d)(1), each state is required to identify those waters that do not meet the water quality standard, which is frequently called the "§303(d)(1) list." For impaired waters identified in the §303(d)(1) list, the states must establish a TMDL for pollutants identified by the EPA. A TMDL specifies the maximum amount of pollutants that can be discharged or loaded into the waters from all combined sources, so as to comply with the water quality standards. Each state is required to

[13] Footnote included in comment referred to: U.S. Environmental Protection Agency Watershed Assessment, Tracking & Environmental Results Website: http://iaspub.epa.gov/tmdl/attains_watershed.control.

submit its §303(d)(1) list and its TMDL to the EPA for its approval or disapproval. The state then incorporates its §303(d)(1) list and its TMDL or the EPA's approved document into its continuing planning process as required by §303(e), 33 U.S.C. §1313(e).

Under the Clean Water Act, the Chelsea River requires a TMDL, but no TMDL has been established. The Commonwealth has no TMDL plan for the Chelsea River. Without TMDL limits, it is impossible to know how the seven facilities will impact water quality in the Chelsea River or endanger public health and safety. Discharging oil and grease, benzene, benzo(a)pyrene, naphthalene, lead, and oxygenates into the Chelsea River could endanger public health, safety, and the environment. Sources of the impairments are identified as aboveground storage tank leaks from tank farms, bulk petroleum facilities, and the cargo loading and unloading associated with terminals that are the subject of these comments. The EPA states that the draft permits sufficiently limit petroleum hydrocarbons and total suspended solids to ensure that discharges do not cause or contribute to aquatic life impairment. The EPA cannot make this statement because no Total Maximum Daily Load limits have been set for the Chelsea River. These permits should not be issued prior to establishment of TMDL limits.

The State of Rhode Island established TMDLs[14] for its portion of the Blackstone River, a water course that has also endured heavy industrial use in the past and the Commonwealth and the EPA should consider this effort as a model. Furthermore, the Mystic River Watershed Association has recorded data for Chelsea River, which could help establish a baseline.[15] The Commonwealth has certainly established TMDLs for other water bodies in Massachusetts. It appears all that is lacking in the effort to establish TMDLs for Chelsea River is a deficit of the political will necessary to commit the resources required for the task.

Should the EPA and MassDEP disagree with the residents' position as detailed in these comments and issue final permits without first approving TMDLs for this section of the Mystic River Watershed, then the residents respectfully request several changes to the draft permits as detailed below.

- Pollutant scans for each facility outfall should be required quarterly including for ethanol for facilities that store ethanol. Permittees should be required to conduct pollutant scans, effluent testing quarterly at regular intervals.
- Permittees should be required to conduct whole effluent toxicity testing quarterly at regular intervals.
- All permittees should be required to test for polycyclic aromatic hydrocarbons monthly at regular intervals.

---

[14] Footnote included in comment referred to: Total Maximum Daily Load Analysis for Blackstone River Watershed, Pathogen and Trace Metal Impairments, Final Report February 2013, available at: http://www.dem.ri.gov/programs/benviron/water/quality/rest/pdfs/blackstn.pdf. The Commonwealth has issued Draft Pathogen TMDLs for its portion of the Blackstone, but the draft is not dated and some of the data is more than 10 years old. See: http://www.mass.gov/eea/docs/dep/water/resources/a-thru-m/bkstone1.pdf.

[15] Footnote included in comment referred to: Mystic River Watershed Association website: http://mysticriver.org/water-quality-monitoring/.

- Permittees should be required to report immediately to the EPA and MassDEP when they exceed the total flow rate, maximum daily value for those facilities with a specified maximum daily value.
- Samples should be collected on the outgoing tide or low tide and all facilities should collect samples on the same day during each reporting quarter. The permittees should be required to ensure that the sampling reflects conditions under which discharges would commonly occur. The permit should require that samples be collected on the out-going tide or at low tide in order to characterize as much as possible Chelsea River water quality rather than inputs from Boston Harbor. Furthermore, if all seven facilities were required to sample the River on the same day this would likely provide a more useful data set for the EPA and MassDEP to evaluate potential impacts of stormwater discharge on the waterbody.
- Facilities should be required to implement best management practices for pre-treating petroleum hydrocarbons and fuel additives such as ethanol and MTBE.
- Facilities should be required to conduct field measurements of pH prior to discharge and permit discharge only allowed if the water pH is between 6.5 and 8.5 SU. In reviewing the sampling results from the past five years, in some cases discharges were released to Chelsea River with pH values as low as 2.96 SU.
- If a facility reports a permit exceedance to the EPA and MassDEP, such facility should be required to increase the frequency of sampling to monthly sampling and prove that they are meeting permit requirements for six consecutive months before reverting back to quarterly sampling. It is recommended that in the event that a parameter is above or outside of the discharge limitation, the facilities would be required to sample and analyze all discharges until the parameter once again meets the permit requirements. These data will help characterize the extent of potential impacts of an exceedance as well as identify systemic failures in the stormwater pollution prevention plan ("SWPPP") that need to be addressed.
- All facilities should be required to submit a draft SWPPP to the EPA and MassDEP for approval.
- Any permit violation should be reported in the monthly discharge monitoring report and uploaded to the EPA Enforcement and Compliance History Online ("ECHO") website.[16]
- NPDES permits should include conditions regarding the temperature limits of the effluent.
- Permittees should be urged to offer community benefits to the neighboring populations as discussed below.

In addition to the above recommended special conditions, the EPA and MassDEP should conduct more frequent unannounced inspections of all seven facilities and issue fines when the facilities are out of compliance. All seven of the facilities have been out of compliance at least one quarter during the past five years. To the residents' knowledge, the EPA did not take any enforcement action against any terminal operators. More frequent inspections and enforcement actions would provide a greater incentive for the facility operators to contribute to improving the Chelsea River water quality. The residents request at least one inspection per facility every six months. If the

[16] Footnote included in comment referred to: The ECHO website is available at http://echo.epa.gov/?redirect=echo and data are available at http://www.epa.gov/envirofw/.

EPA and/or MassDEP take enforcement action against one or more of the seven facilities, those funds should go back into the Chelsea River either through Supplemental Environmental Projects specifically for the Chelsea River and Mill Creek or lower Mystic River Watershed or that the funds be directed to the Mystic River Watershed environmental fund housed at The Boston Foundation. The EPA should establish a publicly accessible web site specifically dedicated to the Chelsea River and provide up to date information that includes current and past water quality tests as well as information on NPDES permit violations. In the event of a permit exceedance, such information should be quickly uploaded to ECHO.

Response to Comment C2:

EPA disagrees that the permits were issued improperly. With respect to anti-backsliding, section 402(*o*) of the Clean Water Act provides that a NPDES permit may not be re-issued with less stringent effluent limitations than a previous permit, unless one of a limited number of anti-backsliding exceptions are met. 33 United States Code ("U.S.C.") §1342(*o*). Since none of the effluent limitations in the permits are less stringent than previous permits, anti-backsliding requirements have been met. In fact, the permits contain several more stringent numeric and non-numeric TBELs. EPA has included these more stringent requirements in meeting provisions of the Clean Water Act and Massachusetts WQSs such that improvements in water quality of the Chelsea River are anticipated.

Furthermore, reissuance of these permits does not trigger an anti-degradation review. Anti-degradation provisions apply to NPDES permits when a receiving water supports one or more of its designated uses such that those uses cannot be degraded by an authorized discharge. The Chelsea River, as described in the fact sheets to the draft permits and repeated in the comment, is impaired for all of its designated uses as a Class SB waterbody. It has not attained any designated use and there are no new or increased discharges which could cause further degradation. Therefore, anti-degradation review is inapplicable here.

Under section 303(d) of the Clean Water Act, states are required to identify those water segments where technology-based controls are insufficient to implement the applicable water quality standards, and which are therefore "water quality limited" or impaired. 33 U.S.C. §1313(d)(1)(A); 40 C.F.R. §130.2(j). Once a segment is identified as water quality limited, the state is further required to establish TMDLs, according to a "priority ranking" for impaired waters, "taking into account the severity of the pollution and the uses to be made of such waters." Clean Water Act §303(d)(1)(C), 33 U.S.C. §1313(d)(1)(A), (C); 40 C.F.R. §130.7. A TMDL is a mathematical approach to allocating the total amount of a pollutant from point sources, nonpoint sources, and natural background, including a margin of safety, which a water quality limited segment can tolerate without violating the applicable water quality standards. 40 C.F.R. § 130.2(i). Section 303(d) of the Clean Water Act requires states to develop TMDLs for waterbodies that will not meet water quality standards after the imposition of TBELs, to ensure that these waters will come into compliance with water quality standards.

Based on the 2012 303(d) Integrated List of Impaired Waters, MassDEP has completed plans for 478 impaired waterbody segments representing 555 water quality impairments. In addition, multiple large studies are either complete or underway that will support future TMDL

development. Because the major causes of surface water impairment in Massachusetts are bacteria and excess nutrients, MassDEP places a high priority on developing and implementing TMDLs for these pollutants.[17] Although no TMDLs for the Chelsea River have been finalized as of the 2012 reporting cycle, MassDEP has completed a draft TMDL to address bacteria impairment in the Boston Harbor watershed, which includes the Chelsea River (MA71-06). MassDEP intends to submit the final TMDL to EPA within the next two years. Timelines for specific TMDLs beyond this two year timeframe have not been established.

In the permits, EPA established numeric effluent limitations under section 122.44(d)(1)(vi). EPA is not required to wait for establishing a TMDL or wasteload allocation for the Chelsea River to issue these permits. Similar to the process of developing a TMDL, EPA determined the assimilative capacity (the loading of pollutant that a water body can assimilate without exceeding water quality standards). Since there is no allowance for a mixing zone (i.e., no available dilution) the water quality criterion must be met at the "end-of-pipe". EPA included WQBELs to comply with both numeric criteria and narrative criteria. Further, EPA considered all discharges in the context of available representative ambient data, including data collected by the Massachusetts Water Resources Authority, the U.S. Geological Survey, U.S. Army Corps of Engineers, and the permittees, to account for existing impacts and ongoing additive and/or synergistic effect.[18] As previously discussed above, EPA applied a margin of safety to be protective of human health and the environment.

As the Environmental Appeals Board held in In re Upper Blackstone Water Pollution Abatement District, "while wasteload allocations may not uniformly be available, effluent limits must be established without waiting for a TMDL or wasteload allocation".[19] The Board further noted that, "[t]he regulations specifically contemplate that permit issuers will establish numeric permit limits when there is no TMDL or wasteload allocation. Subsection (vii) requires the permitting authority to 'ensure' that effluent limits are consistent with "any *available* wasteload allocation." By using the phrase "any available," the regulations expressly recognize that a TMDL or wasteload allocation may not be available."[20] In developing appropriate numeric effluent limitations, EPA further determined that several non-numeric effluent limitations, Best Management Practices and monitoring requirements were necessary to meet the water quality goals of the Clean Water Act.

EPA also disagrees with the comment that the reissued permits will not contribute to improvement in the water quality of the Chelsea River. EPA does not believe any aspect of the

---

[17] Massachusetts' 2012303(d) publication, *available at* http://www.mass.gov/eea/docs/dep/water/resources/07v5/12list2.pdf and Massachusetts' 2014 proposed 303(d) publication, *available at* http://www.mass.gov/eea/docs/dep/water/resources/07v5/14iwlistp.pdf

[18] See MWRA Environmental Quality Department Water Quality Data for Boston Harbor and tributaries station 027, Chelsea Creek; Breault, R.F., Durant, J.L., and Robbat, A, 2005. *Sediment quality of lakes, rivers, and estuaries in the Mystic River Basin, Eastern Massachusetts, 2001–03*. U.S. Geological Survey Scientific Investigations Report: 2005-5191, 110 p.; U.S. Army Corps of Engineers Boston Harbor Navigation Project related documents; and Attachment 3 to fact sheets for permit no. MA0001091 and MA0001929.

[19] 14 E.A.D. 577, 605 (EAB May 28, 2010) (citing 54 Fed. Reg. 23,868, 23,878 (June 2, 1989)).

[20] Id. at 604 (quoting 40 C.F.R. § 122.44(d)(1)(vii) (emphasis added)) (internal citations omitted). See 54 Fed. Reg. 23,868, 23,878 (June 2, 1989).

reissued permits will prevent improvement in receiving water quality. In EPA's judgment, the opposite is true: the reissued permits enhance the overall water quality benefit relative to the previous NPDES permits and ensure compliance with applicable water quality standards. The reissued permits include more stringent numeric limits, technological, operational, and implementation controls to address pollutant loading significantly beyond that of the previous permits and imposes narrative and non-numeric TBELs. EPA included enhanced monitoring and sampling requirements for both the effluent and receiving water to assess additive and/or synergistic effects that could exceed WQSs, including biological monitoring with toxicity testing. The facilities are subject to specific discharge prohibitions (e.g., tank bottom and bilge water), and requirements for on-going operation and maintenance, including annual inspections and requirements to ensure that the stormwater collection and treatment system is operated in a manner that achieves better overall effluent quality than contemplated by the previous permits. Therefore, EPA believes the reissued permits address the impairments to the Chelsea River more effectively than the previous permits. These detailed permitting requirements provide EPA and MassDEP with additional assurance that the discharges from these facilities are being effectively addressed.

Lastly, EPA notes that both conditions and/or pollutants in the receiving water leading to its listing as an impaired water are not numeric and/or quantified. Rather, they are narrative and/or qualitative, as documented in the permits' fact sheets. EPA reviewed and applied effluent limitations and/or other conditions (such as Best Management Practices) to meet the narrative criteria that apply to the Chelsea River.

The designated uses impaired as a result of either "petroleum" or "petroleum hydrocarbons", include the Aquatic Life, Aesthetics, Primary Contact and Secondary Contact uses. Massachusetts' Surface Water Quality Standards do not contain numeric or narrative criteria for petroleum or petroleum hydrocarbons for Class SB waters. However, the narrative criterion for toxics at 314 C.M.R. §4.05(5)(e) states, "waters shall be free from pollutants in concentrations or combinations that are toxic to humans, aquatic life or wildlife". The pollutant "petroleum hydrocarbons" consists of many hundreds of individual compounds, the precise combination and composition of which can vary significantly. Several pollutants or pollutant classes considered "petroleum hydrocarbons" exhibit toxicity and/or pose a significant environmental or human health risk. The qualitative analysis completed for the development of the draft permits followed EPA's *Technical Support Document for Water Quality-based Toxics Control* in the absence of effluent data. In this analysis, EPA determined that limiting indicator parameters would be more protective and efficient than limiting all the possible individual compounds in "petroleum hydrocarbons" to meet the narrative criterion for toxics. EPA selected indicator parameters for pollutants which exhibit physical and/or chemical characteristics strongly representative of other pollutants in the pollutant class.

As a result, EPA selected the most conservative individual toxicants for which national recommended criteria exist, as indicator parameters. EPA determined that for the most limiting parameters, the most stringent applicable criteria were the human health criteria established for exposure through the consumption of aquatic organisms, as no numeric aquatic life criteria have been developed for any pollutant of concern. Additionally, the final permits contain several narrative requirements applicable to all designated uses, including the aquatic life use, based on

314 C.M.R. 4.05(5)(e). Monitoring requirements specific to these criteria, and based on the impairments to the Chelsea River, have also been included, mainly for pollutants for which monitoring data either have not been collected or insufficient data exist to complete a quantitative analysis to determine if the concentrations in the discharges cause or have reasonable potential to cause or contribute to an excursion above water quality criteria. Therefore meeting the effluent limitations for indicator parameters ensures compliance with Massachusetts' Surface Water Quality Standards.

With regard to the requested changes, EPA agrees that several changes in the final permits are warranted. Several of the provisions requested were already included in the draft permits. Also see Response to Comment B2 through Response to Comment B7.

- Facilities that store ethanol are required to conduct sampling for ethanol on a quarterly basis, as requested by the comment. EPA notes that this requirement was included in the draft permit, under Part I.A., independent of the pollutant scan. EPA further agrees that the monitoring frequency for the pollutant scan should be increased to quarterly, for a minimum of the first three years following the effective date of the permit. As noted in Response to Comment B3, increased sampling frequency improves several factors affecting data quality. An increased frequency of sampling increases the statistical confidence with which EPA and MassDEP can determine compliance with the conditions of the permit and to ensure the permits are sufficiently stringent to meet the requirements of the Clean Water Act and Massachusetts' WQSs. Because EPA has increased the sampling frequency for ambient monitoring requirements under Part I.A. Pollutant Scan, Receiving Water pursuant to 40 C.F.R. §122.44(d)(1)(vi)(C) and ensure compliance with Massachusetts' Surface Water Quality Standards at 314 C.M.R. 4.00, and this requirement is inextricably linked to effluent limitations in the permits, EPA agrees that an increased sampling frequency for the effluent is warranted, which would improve the data set and better inform compliance and decision-making for these and other permits in the Chelsea River watershed in the future. The effluent testing, including the pollutant scan, are defined at regular intervals for the required frequencies.
- As noted in Response to Comment B3 and above, an increased frequency of sampling increases the statistical confidence with which EPA and MassDEP can determine compliance with the conditions of the permit and to ensure the permits are sufficiently stringent to meet the requirements of the Clean Water Act and Massachusetts' WQSs. EPA increased the sampling frequency for ambient monitoring requirements under Part I.A. in Response to Comment B3. Since the Whole Effluent Toxicity Testing Chemical Analysis requirement is inextricably linked to the testing protocol for the effluent, EPA agrees that an increased sampling frequency for the effluent is warranted. EPA further agrees that this increase will improve the data set and better inform compliance and decision-making for these and other permits in the Chelsea River watershed in the future. EPA has increased the monitoring frequency for WET testing to quarterly, for a minimum of the first three years following the effective date of the permit.
- EPA has limited polycyclic aromatic hydrocarbons ("PAHs"), a pollutant class containing many hundreds of individual compounds, through indicator parameters. The draft permits established a monthly monitoring frequency for PAHs.

- The permittees are required in Part II.D.1.(e) of the NPDES permits to report to EPA noncompliance, including a non-compliance which may endanger health or the environment. All seven permits specify a maximum daily flow rate for all permitted outfalls.
- The final permits retain the requirement that the permittees implement a "discharge practices BMP" that defines conditions which minimize the runoff, run-on and re-entrainment of pollutants in the discharge. Further, EPA has required, to the extent practicable, that facilities sample concurrently, to better quantify potential impacts of stormwater discharges on the receiving water as described in Response to Comment B2. Also see Response to Comment B2 regarding enhancements EPA has made to the discharge practices BMP for discharge and sampling events, as described in Response to Comment B8.
- The final permits retain the requirement for permittees to implement BMPs for the facilities, including BMPs for fuel oxygenates. All discharges from the facilities receive treatment prior to entering the receiving water.
- The final permits do not include a requirement for field measurements of pH. See Response to Comment B4.
- The final permits do not require an increase in the frequency of sampling to monthly if a permit exceedance occurs, since all pollutants with numeric effluent limits are already subject to monthly sampling, except MtBE. Sampling for MtBE remains quarterly as the additive is no longer in use at any facility. The final permits also retain and include greater specificity regarding corrective action requirements in the event of several conditions, including an exceedance of an effluent limitation. See Response to Comment B5 regarding enhancements EPA has made to the corrective action requirements in response to comments received. Additional actions required of the permittees following an exceedance are handled at discretion of EPA Region 1's Office of Environmental Stewardship and MassDEP's enforcement division, as described in Response to Comment B8.
- The final permits do not require permittees to submit a draft SWPPP to EPA and MassDEP for approval. See Response to Comment B6.
- Permittees are already required to report any permit violation in the monthly discharge monitoring report. Further, once permittees utilize NetDMR for reporting purposes as required in the permits, an automated notice is generated when the permittee attempts to enter a value in violation that requires acknowledgement to submit. These data, through an automated process, are incorporated into EPA's Enforcement and Compliance History Online (ECHO) website, which highlights violations for viewing. Further, in the instance of certain violations defined in Part II of the permits, the permittees must notify EPA within specified timeframes.
- The final permits do not include temperature limits. See Response to Comment C3.
- EPA urges permittees to offer community benefits to the neighboring populations as discussed in the comment. See Comment C5 and Response to Comment C5.

Lastly, EPA and MassDEP have many enforcement options available when violations of the Clean Water Act are discovered. EPA can issue an administrative order to a facility to comply, assess an administrative penalty or refer the case to the Department of Justice for a judicial action seeking a penalty and/or injunctive relief. Finally, if the facility or its employees willfully

acted in violation of the Clean Water Act, EPA can pursue criminal charges. The EPA and the MassDEP may use their enforcement discretion to determine the appropriate enforcement approach to be used after taking into account such factors as the type of problem identified, frequency of occurrence and the responsiveness of the facility in resolving and addressing the problem. The status of potential as well as ongoing enforcement actions are reviewed at least quarterly by EPA staff. In the event of a settlement, an alleged violator may voluntarily agree to undertake an environmentally beneficial project or Supplemental Environmental Project (SEP) related to the violation in exchange for mitigation of the penalty to be paid. EPA has no authority to require that an SEP be included in the settlement. In many instances SEPs involve projects which occur in the community where a facility is located and these projects can therefore have a more direct and tangible benefit to the local community. EPA Region 1 has participated in settlements which include SEPs and would consider the use of future SEPs as long as they meet certain legal requirements and furthers EPA's goal of protecting and enhancing public health and the environment.

Inspections of facilities with NPDES permits are performed by EPA Region 1's Office of Environmental Stewardship. EPA's Office of Site Remediation and Restoration also regularly inspects the bulk fuel storage facilities for their compliance with the Oil Pollution Act. Additionally, these facilities are inspected by MassDEP. EPA's inspection frequency depends on such factors as the regulatory requirements of the program, the compliance history of the facility, the EPA resources available to perform inspections and the extent of competing environmental priorities. Monitoring results, are reviewed with the goal of prioritizing inspections as well as for resolving any violations identified in a timely manner. EPA attempts to take all of the above factors into account when developing an appropriate inspection frequency and therefore cannot commit to an inspection frequency of one inspection per facility every six months as requested in the comment.

Monitoring requirements under the NPDES permitting program are designed to be "self-implementing" and "self-reporting". This means that the permittee is accountable for all aspects of the work to ensure compliance, including the selecting of contractors, paying for the work that is performed, and ensuring that such work is conducted and properly reported to the appropriate permitting authority. The Clean Water Act specifically authorizes self-reporting through Discharge Monitoring Reports (DMRs). Permitting authorities in turn load monitoring data into the Integrated Compliance and Information System (ICIS), which is then uploaded into EPA's Enforcement and Compliance History Online (ECHO) website[21]. Interested persons can access compliance data submitted by the facilities through ECHO. EPA, MassDEP and other federal agencies also provide information regarding the status of waterbodies throughout the United States (e.g., Assessed Waters of Massachusetts by Watershed website[22], available water quality assessment reports[23], and the MyWATERS Mapper for EPA's Office of Water program data, including the National Hydrography Dataset[24]. EPA Region 1 also maintains a dedicated website

[21] Currently accessed at: http://www.epa-echo.gov/echo/
[22] Currently accessed at: http://iaspub.epa.gov/waters10/attains_state.control?p_state=MA
[23] Currently accessed at: http://www.mass.gov/eea/agencies/massdep/water/watersheds/water-quality-assessments.html
[24] Currently accessed at: http://watersgeo.epa.gov/mwm/

for information regarding the bulk petroleum NPDES permits[25] which has been noted on information provided to the public through the Informational Meeting on June 24, 2013 and the Informational Meeting and Public Hearing on April 17, 2014.

With regard to access to information pertaining to these permits online, EPA established a dedicated website for these facilities for the NPDES process.[26] Information available elsewhere, such as the status of the receiving water and TMDLs is not duplicated.

EPA and MassDEP will continue to employ compliance assurance, incentives, monitoring and enforcement to ensure that permitted facilities comply with their permit requirements.
Also see Response to Comment B8.

Comment C3:

B. The EPA and MassDEP permitting actions should evaluate climate change impacts and make changes before issuing final permits to incorporate foreseeable climate change impacts.

In addition to the reasons discussed above, the draft NPDES permits are inadequate because of their failure to consider climate change impacts. Section 316(a) of the Clean Water Act requires the EPA to consider the change to the ambient water temperature in the Chelsea River because of an effluent discharge. The EPA must revise the NPDES permits for all seven facilities to consider that the effects of global climate change could alter the thermal profile of the Chelsea River and Sales Creek. Historical conditions of the thermal profile of the Chelsea River do not necessarily predict future conditions. Since some of the water for the seven facilities originates as boiler blowdown from steam boilers, the NPDES permits should include conditions regarding the temperature of the effluent. As water temperature increases, water pollution problems will increase. As the temperature of water increases, dissolved oxygen levels will decrease. These more complex environmental conditions should be evaluated by the EPA. The NPDES permit limits should reflect these foreseeable climate changes and increases in temperature of the Chelsea River and Sales Creek.

Further, the NPDES permits are jointly issued by the EPA and the Department of Environmental Protection. Under state law, MassDEP is required to consider reasonably foreseeable climate change impacts before issuing the permits under M.G.L. c. 30, §61, ¶ 2.[27] MEPA Section 61, as amended by the Global Warming Solutions Act, states in paragraph one that "[a]ny determination made by an agency of the Commonwealth shall include a finding describing the environmental impact, if any, of the project and a finding that all feasible measures have been taken to avoid or minimize said impact." M.G.L. c. 30, §61, ¶ 1. The second paragraph goes on to say "[i]n considering and issuing permits . . . the respective agency, department . . . shall also consider reasonable foreseeable climate change impacts" (emphasis added). M.G.L. c. 30, §61, ¶ 2. The use of the term "also," by its plain meaning, indicates the legislators' intent for the agency to make findings and also consider reasonably foreseeable climate change impacts. The draft

[25] Currently accessed at: http://www.epa.gov/region1/npdes/chelseacreekfuelterminals/index.html
[26] http://www.epa.gov/region1/npdes/chelseacreekfuelterminals/index.html.
[27] Footnote included in comment referred to: MEPA Section 61, as amended by the Global Warming Solutions Act.

permits fail to include any reference to or analysis of reasonably foreseeable climate change impacts.

Response to Comment C3:

Section 502(6) of the Clean Water Act defines heat as a "pollutant." 33 U.S.C. § 1362(6). Therefore, thermal effluent, such as cooling water or boiler blowdown, is considered a pollutant, and such discharges require a NPDES permit. Only one of the seven facilities at issue generates boiler blowdown, Chelsea Sandwich Terminal, LLC, necessitated by the storage of No. 6 fuel oil, the viscosity of which can be affected by ambient temperatures. The boiler blowdown enters the stormwater conveyance system, comingles with stormwater and groundwater remediation effluent, and receives treatment through the oil/water separator prior to entering the Chelsea River. Based on the proportion of boiler blowdown relative to the total volume of effluent, the configuration of the stormwater conveyance system and expected retention times, the temperature noted for the effluent in the permittee's NPDES permit renewal application, and ambient temperature data collected by the Massachusetts Water Resources Authority,[28] EPA determined no measurable thermal effluent is discharged to the Chelsea River from this facility.

In consideration of this comment, temperature was evaluated during the summer when a heated discharge would be of most concern. EPA requested additional temperature monitoring data and information regarding the generation of boiler blowdown from the facility, which was provided by the permittee on July 28, 2014. The boiler blowdown is generated as a liquid condensate and to some extent, steam. Boiler blowdown is generated by boiler number 1 at a rate and typical total of 25 gallons per day. Boiler blowdown is generated by boiler number 2 at a rate and typical total of 30 gallons per day. The maximum daily volume if boiler blowdown is discharged from both boilers is typically 55 gallons up to a reported maximum of 200 gallons per day. The operating temperature of the boilers ranges from 100 to 170 degrees Fahrenheit, which is equivalent to the maximum possible temperature of boiler blowdown. The temperature of the boiler blowdown effluent upon mixing at the point it enters the stormwater conveyance system was recorded at 84 and 92 degrees Fahrenheit in July 2014. The temperature of the stormwater and groundwater remediation effluent prior to comingling with boiler blowdown was recorded at 73.3 degrees Fahrenheit. The storage capacity of the oil/water separator is 10,000 gallons. The temperature of the comingled effluents in the oil/water separator was recorded at 74.4 degrees Fahrenheit. This temperature neither exceeds the applicable water quality criterion for temperature of a Class SB waterbody, 85 degrees Fahrenheit, nor does this temperature demonstrate a change in temperature of more than 1.5 degrees Fahrenheit (applicable July through September) even before mixing with ambient water.

To evaluate any potential thermal impact to the Chelsea River that would exceed applicable water quality criteria, EPA considered ambient conditions during development of the draft permits. The temperature of the Chelsea River has ranged from 16.18 degrees Celsius (61.1 degrees Fahrenheit) to 24.74 degrees Celsius (76.5 degrees Fahrenheit) in July (i.e., when ambient surface water temperatures are highest) since 2000 (i.e., a time period shortened to account for likely increases in average surface water temperatures due to climate change). The

[28] See surface samples collected in the month of July at station 027 (Chelsea Creek) in dataset titled: *MWRA Harbor Physical Measurements, collected 1989 through 2013*.

Chelsea River holds an average 276,520,753 cubic feet of water.[29] Even if EPA overestimates the thermal impact by calculating an instream temperature using only the upstream critical low flow contribution to Chelsea River, 0.055 million gallons per day, at the maximum temperature of the Chelsea River recorded since 2000, 76.5 degrees Fahrenheit,[30] 10,000 gallons of effluent discharged at 74.4 degrees does not exceed 85 degrees Fahrenheit and will not raise the temperature of the Chelsea River 1.5 degrees Fahrenheit or more.[31] Furthermore, even the direct discharge of 200 gallons per day of boiler blowdown at the maximum 170 degrees Fahrenheit, which is technically not possible given the facility configuration, does not exceed 85 degrees Fahrenheit and will not raise the temperature of the Chelsea River 1.5 degrees Fahrenheit or more.[32] Therefore, EPA maintains that no thermal limits are necessary to meet Massachusetts' WQSs for temperature for a Class SB waterbody. No boiler blowdown or other thermal effluent is generated at any of the remaining six facilities which discharges to the Chelsea River.

The Massachusetts General Law noted in the comment containing the requirement to consider reasonably foreseeable climate change is commonly referred to as MEPA. Pursuant to M.G.L. c. 30, §61 review thresholds, defined in the MEPA regulations at 301 C.M.R. 11.03, MEPA review is required when one or more review thresholds are met or exceeded and the subject matter of at least one review threshold is within MEPA jurisdiction. However, as specifically exempted in 301 C.M.R. 11.02(2), "for purposes of review thresholds, [a] Permit shall not be considered to include… a permit, license, certificate, variance, or approval to continue a preexisting lawful use on a Project site, or amendments or extensions thereof". As the permits are being reissued to continue a pre-existing lawful use, the MEPA review threshold is not applicable, and therefore the requirement in the MEPA statute to consider reasonably foreseeable climate change does not apply.

Nevertheless, EPA does consider foreseeable climate change impacts in the reissuance of NPDES permits as such impacts are relevant to the EPA's authority under the NPDES program. The factors to consider are documented in EPA's NPDES Permit Writer's Manual, Sections 5.2.2.7 and 6.2.4.2. Regarding Section 5.2.2.7, a thermal variance under Clean Water Act Section 316(a) is not appropriate to the facility generating boiler blowdown nor is a 316(b) variance needed since the thermal discharge does not cause or contribute to a violation of water quality standards. Regarding Section 6.2.4.2, the 7Q10 calculation period of record is also not applicable as EPA has not allowed a dilution factor in consideration of any upstream flow contribution. Rather than reduce the available flow under critical low flow conditions, which would result in a

---

[29] Estimated using the surface area of segment MA71-06 in *Massachusetts Year 2012 Integrated List of Waters* and river depths recorded on the National Oceanic and Atmospheric Administration, Office of Coast Survey nautical chart number 13272 for Boston Inner Harbor.

[30] Probability of perennial flow statistics determined using U.S. Geological Survey Massachusetts StreamStats tool for NAD83 Latitude 42.4031 and Longitude -71.0140 available at http://water.usgs.gov/osw/streamstats/massachusetts.html.

[31] The mixing equation is as follows: downstream concentration = (effluent flow*effluent temperature + ambient 7Q10*maximum ambient temperature)/sum of effluent flow and ambient 7Q10; (0.01 MGD*74.4ºF + 0.055 MGD*76.5ºF)/0.065 MGD = 76.18ºF; therefore ΔT = -0.32ºF.

[32] The mixing equation is as follows: downstream concentration = (effluent flow*effluent temperature + ambient 7Q10*maximum ambient temperature)/sum of effluent flow and ambient 7Q10; (0.0002 MGD*170ºF + 0.055 MGD*76.5ºF)/0.0552 MGD = 76.84ºF; therefore ΔT = 0.34ºF.

lowering of allowable dilution, where water quality based limits apply, these limits are applied at the end-of-pipe for all facilities, including the facility that generates boiler blowdown.

Finally, as the commenter has correctly noted, changes in the ambient thermal profile can alter the toxic effect of certain pollutants. EPA reiterates the importance of incorporating monitoring requirements for multiple pollutants considered during permit development. For example, EPA added monitoring requirements for ammonia, in conjunction with Whole Effluent Toxicity Testing, the toxicity of which increases as the temperature and pH increase.

Comment C4:

Below is a list of questions the residents have for the agencies.

- How do the permits account for the testing of incidental release quantities of pollutants as compared with the required testing of treated stormwater?
- The environmental and public health burden of these seven facilities are not measured by stormwater reports. How does the EPA fully evaluate the facilities impacts to the surrounding environmental justice populations and communities?
- All seven bulk petroleum terminals were issued draft permits simultaneously. Did EPA and MassDEP consider each of the facility's discharge in isolation or consider all seven facilities' discharge holistically?
- How did the EPA and MassDEP determine effluent limits and parameters in a way that accounted for similar discharges by the other six facilities?
- What is the plan and timeline for establishing TMDLs for the Chelsea River?

Response to Comment C4:

- How do the permits account for the testing of incidental release quantities of pollutants as compared with the required testing of treated stormwater?

NPDES permits generally contain effluent limitations, monitoring and reporting requirements, standard conditions, and special conditions such as Best Management Practices (BMPs), if appropriate), to ensure that the goals of the Clean Water Act are met. If there is a direct spill or release to the surface water, that incident is beyond the scope of the NPDES permit. The Coast Guard enforces Section 311 (33 U.S.C. §1321) for oil spills (Section 311 is also known as the Oil Pollution Act) for coastal waters and ports. However, the facilities are subject to the Spill Prevention, Control, and Countermeasure (SPCC) Rule implemented by EPA's Emergency Management Program.

The effluent limitations and requirements in the permits are designed to control any pollutant that comes into contact with any effluent at the facilities. This is especially important for stormwater, as it is the largest volume of effluent discharged at all seven facilities by volume. The permits specifically prohibit any discharge following accidental release of reportable quantities of petroleum products and include specific restrictions for bypass of the treatment systems at the facilities in the event of an emergency. The facilities are further required to implement Best

Management Practices that prevent contact between any accidental spills or releases with any of the effluent authorized in the permits.

- How does the EPA fully evaluate the facilities impacts to the surrounding environmental justice populations and communities?

Under the scope of the Clean Water Act, EPA considers impacts to any receptor as a result of discharge from permitted outfalls, whether a resident of the surrounding communities or an aquatic organism. Limits are developed based on the designated uses in the receiving water and the water quality criteria Massachusetts has determined are necessary to protect designated uses and the related receptors. The permits include stringent numeric effluent limitations based on human health criteria and conservatively exclude dilution in the receiving water. These limits apply to all effluent discharged from these facilities. EPA believes the limitations and requirements in the permit address, to the extent allowable under EPA's authority under the Clean Water Act and its implementing regulations, impacts to human health and the environment that have been reasonably ascertained from the available information for the effluent, the receiving water, the surrounding environmental justice communities and discharges from similar facilities. The overall burden on the surrounding communities of these facilities, including pollutant loading beyond the context of point source discharges regulated under the NPDES program, is discussed in the EJA. EPA considered the information documented in the EJA during permit development and incorporated requirements necessary to protect human health and the environment. Also see Response to Comments related to the EJA, included in Part III.

- Did EPA and MassDEP consider each of the facility's discharge in isolation or consider all seven facilities' discharge holistically?

EPA considered these permits not in isolation, but rather, in the context of all potential direct dischargers (including other petroleum bulk stations and terminals) of light and heavy hydrocarbons, which discharge either directly into Chelsea River or indirectly (via tributaries or hydrologic connection). EPA also accounted for possible non-point source contributions by evaluating the presence of the pollutants of concern in the receiving water. The final permits are conditioned to: 1) better regulate plausible non-stormwater discharges (e.g., hydrostatic test water and groundwater remediation system effluent) alone or in combination with stormwater runoff to Chelsea River, and 2) to better regulate ancillary operations that have the potential to contact stormwater (e.g., materials storage, facility site-runoff, product blending, and product loading and unloading). EPA's approach follows guidance in EPA's *Technical Support Document for Water Quality-based Toxics Control* and generally aligns with the analysis recommended in EPA's *Watershed-Based National Pollutant Discharge Elimination System (NPDES) Permitting Technical Guidance*. See Response to Comment C1.

- How did the EPA and MassDEP determine effluent limits and parameters in a way that accounted for similar discharges by the other six facilities?

As discussed in Response to Comment C2, EPA completed a reasonable potential analysis in accordance with EPA's *Technical Support Document for Water Quality-based Toxics Control* which includes factors pertaining to multiple sources. EPA also ensured that all seven facilities

are required to meet a suite of identical requirements and additionally incorporated site-specific conditions where appropriate. In addition, the effluent limitations that are water quality-based are applied at the end-of-pipe (i.e., no allowable dilution).

- What is the plan and timeline for establishing TMDLs for the Chelsea River?

For information pertaining to TMDLs, please refer to Response to Comment C2.

Comment C5:

Some examples of community benefits include, but are not limited to, diesel retrofits for trucks traveling to and from the oil terminals, improvements to public access areas, wetlands restoration funds, funds for an attorney and/or scientist and/or engineer to explain effluent sampling results and legal implications, and multilingual signs placed at public access points along the Chelsea River indicating the impaired water quality status and restrictions on recreation. These seven facilities easily have funds to make the bulk petroleum facilities safer and less of an environmental and public health burden. As noted in the EJA, the affected populations have excess cardiovascular death rates, which can be partially addressed. Facility operator funds should be invested in diesel particulate filters for the delivery trucks traveling to and from the facilities to reduce air emissions, which would lessen the negative health impacts of exposure to truck emissions associated with the seven facilities. Additionally, funds could be contributed toward the other community benefits listed above.

In conclusion, the communities that abut the seven bulk petroleum facilities and Chelsea River face not only an environmental justice burden but also a pollution burden of historical proportions. Simply put, many residents have lived beside or near a water body that has been polluted for a very long time. The final NPDES permits, if issued, should acknowledge this fact and incorporate the aforementioned suggested changes so that conditions in the Chelsea River and in the surrounding area can improve and contribute to environmental justice in Chelsea, East Boston, and Revere. Thank you for the opportunity to comment.

Response to Comment C5:

As noted in Response to Comment C2 above, EPA urges the permittees to consider the commenters' suggestions. EPA also encourages the communities to seek funding for the control measures, public access and restoration and educational activities through appropriate state and federal programs or by working directly with the permittees. EPA has used its authority under the Clean Water Act to incorporate appropriate limits and conditions sufficiently connected to water quality impacts or technology-based limitations. It is not clear to EPA how the community benefits requested are connected to water quality impacts or technology-based limitations. Nor has the commenter provided such an explanation. While the request pertaining to wetlands restoration may be related to water quality impacts, without more specific information as to a description, location, and need for a particular project, such a request is too vague for EPA to evaluate at this time. EPA notes, however, wetlands restoration may be appropriate in the context of a suitable enforcement action, such as a SEP. See Response to Comment C2 for additional information regarding SEPs.

EPA acknowledges the environmental justice communities which surround the permitted facilities as well as the documented legacy pollution both at the permitted facilities and in the Chelsea River. Considerable effort has been expended to ensure that EPA has considered all known or suspected pollutants discharged under authorization of these permits. EPA has also expended considerable effort to ensure that the communities have been afforded meaningful involvement in the permitting action. EPA has thoroughly considered the comments received from ACE, submitted on behalf of the communities, and has incorporated the majority of changes to the final permits that ACE requested in Comment C2.

EPA requested clarification from ACE regarding the request for the permittees to fund a technical expert to explain monitoring results to the public. (A related request is included in Comment J1). ACE responded by providing an NPDES permit issued by the State of Washington to City of Spokane Riverside Park Water Reclamation Facility and by referring to the Wheelabrator facility in Saugus, Massachusetts, which, according to ACE, pays a consultant to review and interpret its air quality reports for the local Board of Health. ACE did not explain, however, the particular purpose to be achieved by such independent data interpretation in the case of these NPDES permits. In both of the examples provided, the technical expert funding arrangement appears to have arisen through negotiations with the facilities outside of permitting actions. In the case of the Wheelabrator facility, the current state-issued air permit does not appear to be the source of any such requirement. According to MassDEP, a settlement agreement required Wheelabrator to hire an independent environmental auditor to monitor the company's compliance with environmental regulations for a period of three years but does not provide services directly to the public. However, unrelated to this agreement and the permit, an additional consultant hired by the local communities periodically reviews Wheelabrator's files and reports to the local communities. In the NPDES permit example issued by the State of Washington, the technical consultant included in the permit appears to have been included to align with an agreement outside of the permit process.[33] The permittee-initiated voluntary arrangement appears to have developed in response to efforts to identify the sources of PCB contamination in the Spokane River and was apparently aimed, at least in part, at educating the public to reduce the use of products containing PCBs that could make their way to the river via wastewater sent to the permittee – a publicly owned wastewater treatment facility.

In the case of these NPDES permits, however, it is not clear to EPA the specific purpose that would be served by requiring independent review and interpretation of monitoring data or that such a requirement is needed to ensure compliance, nor did ACE provide further clarification of the particular purpose to be achieved. The final permits currently require the permittees to provide EPA and DEP with discharge monitoring reports ("DMRs") and other mandatory reports (including Hydrostatic Test Summary Letter/Report, and Toxicity Test Results) on a timely basis. Once permittees begin using NetDMR for reporting purposes, as required in the permits, an automated notice will be generated when the permittee attempts to enter a value in violation that requires acknowledgement to submit. These data are automatically incorporated into EPA's Enforcement and Compliance History Online ("ECHO") website, [34] which highlights violations for viewing. Further, in the instance of certain violations defined in Part II of the permits, the

[33] See *Spokane River Regional Toxics Task Force Final Memorandum of Agreement* at http://srrttf.org/.
[34] Currently accessed at: http://www.epa-echo.gov/echo/

permittees are required to notify EPA within specified timeframes for certain conditions. The permits also require the facilities to maintain their Stormwater Pollution Prevention Plans ("SWPPPs") and annual certifications onsite and to make them available upon request to EPA, MassDEP, and/or the city in which the facility is located. EPA and MassDEP evaluate compliance through inspections of the facilities and review of the submitted monitoring data and other reports and routinely coordinate compliance and enforcement activities. The final permits also require the permittees to provide a summary of discharge monitoring report data and copies of their SWPPPs to the public by posting these data on the company's own website, if practicable. Additionally, agency staff field inquiries from the public regarding compliance issues and any person may report suspected environmental violations to EPA.[35]

NPDES regulations do not require permittees to engage in community outreach and education to the extent requested. Consequently, EPA has decided as a matter of discretion not to include a requirement to fund a technical expert. EPA strongly urges the permittees, however, to consider the commenter's suggestions and encourages the permittees to undertake voluntary outreach efforts to improve the relationships between the facilities and their communities. EPA regards such voluntary efforts as incentive factors to consider on a case-by-case basis under EPA's *Interim Guidance for Performance-Based Reduction of NPDES Permit Monitoring Frequencies* in the event monitoring frequency reductions are requested. EPA also notes that community outreach and supplemental environmental projects may occasionally be negotiated as part of a settlement agreement between the Agencies and the permittees in the event of an enforcement action. Some public notification is required of permittees conducting certain activities or under certain circumstances under the Massachusetts Contingency Plan (see 310 C.M.R. 40.0000). While not relevant to these permits, nearby communities may also receive public notification benefits from permittees subject to the nine minimum control measures aligned with EPA's National CSO Control Policy (59 FR 18688), provisions of the Massachusetts Water Resources Authority's monitoring programs, or public participation requirements associated with the National Pretreatment program for certain Publicly-Owned Treatment Works receiving pollutants from significant industrial sources.

Comments submitted by Staci Rubin, Senior Attorney, Environmental Justice Legal Services Director, Alternatives for Community & Environment, Inc., on behalf of Alternatives for Community & Environment, Inc., the Chelsea Collaborative, and Neighborhood of Affordable Housing.

Comment D1:

This comment letter is filed on behalf of Alternatives for Community & Environment ("ACE"), the Chelsea Collaborative, and Neighborhood of Affordable Housing ("NOAH"). The three organizations have partnered for almost two decades working to improve the water quality of the Chelsea River and to achieve environmental justice in Chelsea and East Boston. ACE, the Chelsea Collaborative, and NOAH adopt the comments made by residents in Chelsea and East Boston filed separately by ACE.

[35] See http://www2.epa.gov/enforcement/report-environmental-violations.

ACE, the Chelsea Collaborative, and NOAH commit to continue to protect the Chelsea River and urge the United States Environmental Protection Agency and Massachusetts Department of Environmental Protection to commit additional resources to environmental justice efforts in and around the Chelsea River.

Response to Comment D1:

EPA appreciates the long-term efforts of these organizations to improve water quality of the Chelsea River and their work to achieve environmental justice for the communities. Please see Response to Comment C1 through Response to Comment C6 regarding the comments submitted separately by ACE.

This comment also appears in Part III., below.

Comments submitted by Salvatore LaMattina, Boston City Councilor, District One:

Comment E1:

As the City Councilor who represents the neighborhood of East Boston, I felt it necessary to write to you and express some of my concerns over the reissuing of permits to seven different bulk petroleum storage facilities located along the Chelsea River. As you know, my neighborhood directly abuts the river and would be severely impacted by any potential environmental disasters that may occur. We already feel the negative effects of pollution created by the existence of Logan Airport and three harbor tunnels, so I feel that it's only fair that we be kept informed as to what improvements will be made to insure us of our safety.

To start, are there plans to clean up the Chelsea River and maintain its cleanliness? And I ask this not just for the sake of my constituents, but for the impact on wildlife and aquatic life, aesthetics and overall recreational use of the river. I know that the draft permits limit the amount of contact with stormwater that the pollutants may have, but we would just like some reassurance that 1) the companies will comply and that strong enforcement will be in place if they don't; and 2) who will be supervising and monitoring them?

Second, given the poor performance of some facilities in the past, what will be demanded of them if they do not remain up to par? We in East Boston feel that much more should be asked of these companies to contribute to the overall health of the neighborhood to mitigate the great burden that they may cause. At the very least, a fund could be established to put in reserve for large asks in case we need any help or improvements.

Lastly, not only am I the elected official for this neighborhood but I am also the Chair of the Committee on Economic Development & Planning & Labor for the Boston City Council. After decades of desolation, the waterfront and inner harbor are finally starting to see some revitalization. My fear is twofold, that developers would shy away from building in what could potentially be a "danger zone" and that the housing and rental market would be stifled because residents would be afraid to move to the community. So again, any reassurance you can provide would be greatly appreciated.

In closing, all that we are asking is that these companies continue to be good neighbors and practice full transparency in compliance with the Clean Water Act. We want to make sure that adherence to the regulations is their number one priority, in word and action. There are too many cities and towns surrounding Chelsea Creek and we don't want to take any chances. Thank you for your time and attention to this matter.

Response to Comment E1:

NPDES permits are not specifically designed or intended to address environmental disasters, which EPA takes to mean emergency or catastrophic releases. Several EPA programs and multiple local, state and federal entities beyond EPA assume primary responsibility for such situations. Also see Response to Comment C4.

With regard to the status of pollution levels and attainment of water quality standards (i.e., "cleanliness") of the Chelsea River, refer to Response to Comment C2 and Response to Comment C4. EPA has also identified a number of ongoing activities, apart from the NPDES permits, that address the cleanup of existing contamination in and adjacent to the Chelsea River. For example, existing contamination in soil or groundwater, is being or has been addressed primarily through the Massachusetts Contingency Plan (301 C.M.R. 40.0000) at each of the seven facilities. Removal actions continue at several nearby sites under the Comprehensive Environmental Response, Compensation, and Liability Act (commonly known as "Superfund"). Contaminated sites also continue to be assessed, cleaned up and re-developed through EPA's Brownfields Program in this area.

In terms of maintaining the "cleanliness" of Chelsea River, several state programs exist to prevent additional degradation of the River. Massachusetts General Law Chapter 91, implemented by MassDEP, Massachusetts Coastal Zone Management, and Massachusetts Division of Marine Fisheries, among others, regulates activities related to construction, dredging and filling in and around the Chelsea River, preserves and protects the rights of the public, and guarantees that private uses of tidelands and waterways serve a proper public purpose. So, for example, if a facility repairs or replaces its seawall containment structure, any contamination is managed. The U.S. Army Corps of Engineers maintains the Chelsea River as one of the nation's navigational channels. This includes periodic maintenance dredging (i.e., the depth of the channel is maintained to at least 38 feet, as currently mandated) and improvement dredging (i.e., the depth of the channel is increased). In dredging activities, contaminated sediment is managed. Previous maintenance dredging completed in the Chelsea River removed contaminated sediment to Confined Aquatic Disposal ("CAD") cells constructed in the Mystic River. EPA is also a cooperating agency for the Boston Harbor Deep Draft Navigation Improvement Project. Information regarding activities conducted by the U.S. Army Corps of Engineers in Boston Harbor is available on the corps website.[36]

While direct cleanup activities have or will continue to occur, water quality improvements to protect all designated uses for the Chelsea River and human health for adjacent neighborhoods, including East Boston, also continue. In addition to source reduction through point source

[36] http://www.nae.usace.army.mil/Missions/ProjectsTopics/BostonHarbor.aspx

control in these permits, non-point source controls are addressed through MS4 permits for stormwater. All permits issued under the Clean Water Act contain provisions for the protection of water quality, including human health criteria, where applicable.

EPA and MassDEP will continue to employ all of the tools available to both Agencies (e.g., enforcement, inspections, compliance assurance, and monitoring) to ensure that permitted facilities comply with their permit requirements. As discussed in EPA's response to Comment C2, EPA can pursue civil as well as criminal penalties for facilities that fail to comply with their permit and violate the Clean Water Act. Under the Clean Water Act, EPA can seek a civil penalty of up to $37,500 per day for each violation. Penalties collected as a result of an enforcement action under the Clean Water Act go to the U.S. Treasury. As described in Response to Comment C2, above, in the event of a settlement, an alleged violator may voluntarily agree to undertake an environmentally beneficial project or SEP related to the violation in exchange for mitigation of the penalty to be paid. EPA has no authority to require that an SEP be included in the settlement. EPA Region 1 would consider the use of future SEPs as long as they meet certain legal requirements and furthers EPA's goal of protecting and enhancing public health and the environment. EPA also encourages communities to seek funding through other appropriate state and federal programs for other local projects which could benefit the community.

The Permittee is required to certify at least annually that the Terminal is in compliance with the SWPPP. If the Terminal is not in compliance with any aspect of the SWPPP, including implementation of BMPs, the annual certification shall state the non-compliance and the remedies which are being undertaken. The Permittee must also certify, at least annually, that the previous year's inspections and maintenance activities were conducted, results recorded, records maintained, and that the Terminal is in compliance with this permit.

With regard to monitoring, the permittees self-monitor and report their results to EPA and MassDEP. The Agencies oversee the facility's compliance with permit limitations and conditions. The permittees are required to collect representative samples and use a certified analytical laboratory to test the samples. Sample test results are recorded on Discharge Monitoring Reports ("DMRs") which must be submitted by the 15th of the month following the sampling event. EPA and MassDEP may review the data, audit the labs, and/or perform random inspections, during which they can take their own samples.

EPA agrees that transparency and assuring compliance are important components of the NPDES permitting program. EPA is working to enhance transparency and compliance as well as the quality of the data being reported by facilities by requiring electronic reporting through the use of NetDMR. NetDMR is a web-based tool that allows facilities to electronically report their DMRs to EPA through a secure internet connection. All newly issued NPDES permits in Massachusetts and New Hampshire have the use of NetDMR as a permit requirement and many of the bulk fuel terminals along Chelsea River have voluntarily begun using NetDMR. NetDMR is intended to improve the accuracy of the data submitted as well as speed up how quickly the data is made available to EPA for review. Having quicker access to the data also means more timely compliance determinations made by EPA as well as reported to the public through ECHO. Given the benefits of electronic reporting, EPA has shortened the timeframe for how long a

facility has to begin using NetDMR from twelve (12) months to six (6) months. Several of the permitted facilities already use NetDMR. Finally, the final permits include additional disclosure requirements for the permittees to provide discharge monitoring data and copies of their Stormwater Pollution Prevention Plans to the public. Also see Response to Comment C5.

Additional authority concerning prevention and response to releases of hazardous materials rests with state and local governments. The Emergency Planning Community Right-to-Know Act (EPCRA) of 1986,[37] which was created to help communities plan for emergencies involving hazardous substances, generally requires hazardous chemical emergency planning by federal, state, local and tribal governments, and industries. Industrial facilities are required to report the storage, use and release of hazardous chemicals. EPCRA requires the establishment of State/Tribe Emergency Response Commissions (SERCs/TERCs), responsible for coordinating certain emergency response activities and for appointing Local Emergency Planning Committees (LEPCs). Each state's SERC is responsible for implementing the EPCRA provisions within its state. The Massachusetts SERC is located within the Massachusetts Emergency Management Agency (MEMA). The SERC's duties include: establishing procedures for receiving and processing public requests for information collected under EPCRA; reviewing local emergency response plans; designating local emergency planning districts; appointing a Local Emergency Planning Committees (LEPC) for each district; and supervising the activities of the LEPC. LEPCs, created by a state's Governor, develop emergency response plans, review those plans at least annually, and provide chemical information to citizens. Plans are developed by LEPCs with stakeholder participation. There is one LEPC for each of the more than 3,000 designated local emergency planning districts. The LEPC membership must include (at a minimum): elected state and local officials; police, fire, civil defense, and public health professionals; environment, transportation, and hospital officials; facility representatives; and representatives from community groups and the media.

Many LEPCs have expanded their activities beyond the requirements of EPCRA, encouraging accident prevention and risk reduction, and addressing homeland security in their communities. Composed of representatives from all segments of the community interested in emergency planning and preparedness, LEPCs foster a valuable dialogue among members of the public, industry and government. In some communities LEPCs have formally aligned themselves with FEMA's Citizen Corps Program. Further, Chelsea's LEPC has produced a Hazard Mitigation Plan,[38] which is a proactive effort to identify actions that reduce the risk to life and property from natural hazard events, such as flooding. The Federal Disaster Mitigation Act of 2000 requires all municipalities that wish to be eligible to receive FEMA grant funding for hazard mitigation, to adopt a local multi-hazard mitigation plan and update this plan in five year intervals. These plans increasingly include climate mitigation planning.

Comments submitted by Matthew Frank, President, Chelsea City Council:

Comment F1:

[37] 42 U.S.C. §11001.
[38] See *City of Chelsea Hazard Mitigation Plan 2014 Update*, Draft for City Review May 16, 2014.

Matthew Frank. I'm president of the Chelsea City Council. Welcome, EPA and DEP to my chambers.

My concern is, I am not sure if the cumulative effects of each of the seven terminals is being taken into account. I do understand that, if you regulate each one, then, in theory that would work out. But, if you have seven, and they're all discharging the maximum amount, I do have a concern that it could lead to way too much. The same way that one person speaking with their indoor voices, as those in the education field would say, is fine. But, if everybody in this room started speaking kind of in that rabble, rabble way that sometimes people do, it becomes unbearable and you can't hear what's going on.

I also do have concern about the Environmental Justice half mile assessment. I represent a district in the city over near, I generally say, between the Home Depot, the wind turbine, and the water tank up at Soldier's Home. And I know Sue is one of my constituents. We're not within the half mile radius. But, we are on the Mill Creek, which comes off of the Chelsea Creek. And anything that happens in the Chelsea Creek goes up the Mill Creek right into that neighborhood. We have many under water waterways that run underneath the neighborhood. The flooding of my basement every time it rains kind of help proves that. Even if the sump pump is going full blast, there's always water down there, because the water's running through. Because it used to be the clay pits as most people in this room remember. So, that is a concern of mine, that we actually have four buildings in my neighborhood right on the creek that house people who have they're -- that are run by the housing authority. So, the big red building at that end, at the very end of Clark Ave. We also have a lot of low income residents right on the Creek, including a minority population, of Latino descent. I know, there's also a lot of white people in my neighborhood. But, we do have a minority population specifically on the Chelsea Creek itself.

I would say there is a concern that the permitting process doesn't include accidents that happened outside of that one particular pipe. So, if oil gets spilled in the transferring process, it's my understanding that the permits don’t include anything that is happening outside of what they're putting into the pipe and that's going into the water.

The last thing I would say, and that would -- it might not be completely relevant. But, one of the concerns I've always had as a member of the planning board, then a member of the council, and now as president, is, people often say to me, why do we need to have these seven oil tanks? Why do we need all of this industrial use on the waterfront? I personally get asked all the time why I let that happen. And my concern is, I let that happen because we can't do anything else. The state tells us this has to be maritime use, specifically where these tanks are, it has to be maritime industrial use because of a state regulation. And that's a real concern of mine, because we try to clean up the creek. And we've done so -- we pull carriages out of the water. I've personally been up to my knees pulling stuff out of the creek. And no matter what we do, we still end up with oil tanks on the creek. We still end up with pollution coming into the community. And I realize that the limits have been reduced in some of these new permits. But, it's still happening. And when you've got seven, my hope is that we can at least -- that's something in the future we can push away.

But, in the meantime, I would like to see gradual movement, the same way that the auto regulations are pushed 20 or 30 years into the future, we already kind of know what the federal government wants in 20 or 30 years. My hope is that we can build a timeline for things like these permits that say, okay. Well, today, technology will only allow, you know, five – milligrams per liter. But, maybe in five years, it could be four. And with the hope that we could push facilities to get to zero.

But, thank you so much. Like I said, welcome again.

Response to Comment F1:

With regard to the commenter's concerns pertaining to the cumulative effect of pollutants authorized in the permits, refer to Response to Comment C1, and Response to Comment C4. EPA has taken into account the cumulative effects of these discharges through the development of these permits under the Clean Water Act as necessary to ensure discharges comply with Massachusetts' Surface Water Quality Standards.

With regard to the Environmental Justice half-mile assessment, see Response to Comment C6. This comment also appears in Part III., below.

With regard to the commenter's reference to maritime industrial use, both the Chelsea River and the Mystic River (the area in which the Chelsea Sandwich facility is located) are Designated Port Areas ("DPAs") established by the Commonwealth of Massachusetts. All matters of oversight pertaining to the DPA are beyond the scope of the NPDES permit program. The Massachusetts Office of Coastal Zone Management ("MassCZM") addresses these designations. MassCZM has generally defined DPA's as having "particular physical and operational features important for water-dependent industrial uses—such as commercial fishing, shipping, and other vessel-related marine commercial activities—and/or for manufacturing, processing, and production activities that require marine transportation or need large volumes of water for withdrawal or discharge. While water-dependent industrial uses vary in scale and intensity, they all generally share a need for infrastructure with three essential components: (1) a waterway and associated waterfront that has been developed for some form of commercial navigation or other direct utilization of the water; (2) backland space that is conducive in both physical configuration and use character to the siting of industrial facilities and operations; and (3) land-based transportation and public utility services appropriate for general industrial purposes."

Please refer to Response to Comment C4 and Response to Comment E1 regarding spills or releases and EPA's authority through the NPDES program with regard to incidental releases and/or emergency situations. The NPDES permit regulates the types of effluent defined in the permits for each facility, which have the potential to come into contact with spills or releases. Ultimately, if the spill occurs within the facility and reaches the Chelsea River through the permitted outfalls, the spill is regulated by the permits. The final permits include specific Best Management Practices and prohibited discharges impacting the permissibility of discharges of incidental spills. The Standard Conditions further describe requirements for certain bypass or upset conditions.

With regard to longer term goals, as the United States Supreme Court has explained, "[t]he Federal Water Pollution Control Act, commonly known as the Clean Water Act, is a comprehensive water quality statute designed to 'restore and maintain the chemical, physical, and biological integrity of the Nation's waters.' The Act also seeks to attain 'water quality which provides for the protection and propagation of fish, shellfish, and wildlife.'"[39] Two additional goals were established: zero discharge of pollutants by 1985 and, as an interim goal and where possible, water quality that is both "fishable" and "swimmable" by mid-1983.[40] While those dates have passed, the goals remain, and efforts to attain them continue. As a result, the Clean Water Act is generally considered a technology-forcing statute because it requires dischargers to achieve higher and higher levels of pollution abatement.[41] In these permits, technology-forcing effluent limitations include the increasingly stringent limits on polycyclic aromatic hydrocarbons, benzo(a)pyrene and naphthalene, and the volatile organic compound, benzene. To comply with many of the effluent limits, the facilities may need to utilize treatment technologies and BMPs to reduce the level of pollutants to very low levels (i.e., below the minimum level for analysis). Further, treatment technology and Best Management Practices that will reduce these compounds to the low levels required is expected to further reduce concentrations of all other pollutants of concern over the permit term. EPA will evaluate the levels of pollution in the discharges, potential impacts to water quality of the discharges, and potential technologies available to reduce pollutant levels during subsequent permit renewals.

Comments submitted by Madeleine Scammell, Chelsea Board of Health:

Comment G1:

Thank you. My name is Madeline Scammell. I'm a resident of Chelsea. I serve on the Board of Health. I'm an environmental health scientist myself. I study cumulative risk analysis. I'm one of EPA's grantees under the STAR program in partnership with the Chelsea Collaborative. But, I don't have to do any really fancy analyses to recognize cumulative exposures as in this situation. And so, I guess, I have a comment and a question, which I understand you can't answer now. But, I would like to be on the record.

I feel like the Environmental Justice analysis that was done was nice for characterizing our city as it is and the health of Chelsea Creek, or Chelsea River as it's called. But, the conclusion just surprises me. EPA acknowledges that the Chelsea River and surrounding communities are impacted by many environmental burdens. Yes. That is the case. And yet, has determined that the facility's discharges will not result in disproportionately high environmental effects.

The benzene concentrations that are allowed, 51 micrograms per liter, are typical of NPDES permits and are not lower than this typical amount for any of the seven permits that are being considered today. And seven permits equals a lot more than 51. I don't know what the flow rate is in terms of what will actually be discharged to result in the water quality concentration of benzene. But, I do know that toxic effects on aquatic species have been found at 700 micrograms

---

[39] *PUD No. 1 of Jefferson County v. Washington Dept. of Ecology*, 511 U.S. 700, 704 (1994) (quoting 33 U.S.C. § 1251(a)) (internal citations omitted).
[40] 33 U.S.C. § 1251(a)(1), (2).
[41] Refer to summaries of the Clean Water Act in Congressional Research Service reports RL30798 and RL30030.

per liter. So, that's not a whole lot more than 51 without doing any calculations. And while 51 micrograms per liter is a low amount, it's orders of magnitude higher than the drinking water standard. And we don't drink that water, of course. But, we do muck around in it sometimes, like on April 26th when we're going to clean the Chelsea Creek.

And as an Environmental Justice community, it's not so much about the health effects as it is quality of life. And I feel like EPA Region 1 has a real opportunity to make a point that 51 may be typical. But, here, we can reduce it and we can make a difference in terms of reducing cumulative effects on our environment and our ability to enjoy the environment. So, with that, I will just thank you again for being here.

Response to Comment G1:

The effluent limitations for benzene included the permits range from "non-detect" (compliance level established at 2 µg/L) to 51 µg/L. The effluent limitations that are technology-based, that is, based on the amount of benzene permitted in an effluent when a specific type of treatment is applied, are 5 µg/L at four internal outfalls and 40 µg/L at one primary outfall. Discharges through outfalls with TBELs are first treated by carbon adsorption except at one internal outfall previously treated by carbon adsorption where the limit was retained to meet anti-anti-backsliding requirements. The effluent limitations that are water quality-based are applied at the end-of-pipe (i.e., no allowable dilution) at 51 µg/L at five direct discharges to Chelsea River and 2 µg/L at one direct discharge to Sales Creek.

When including national recommended water quality criteria in NPDES permits, EPA has inherently included an assessment of risk. As noted in Response to Comment C1, any human health criterion for a toxicant is based on at least three interrelated considerations: 1) cancer potency or systemic toxicity; 2) exposure; and 3) risk characterization. National Recommended Water Quality Criteria are derived using risk assessment methodology. Therefore, a human health criterion is the highest concentration of a pollutant in water that is not expected to pose a significant risk to human health based on the toxicity, exposure, and acceptable risk levels as set forth by EPA. The commenter is correct that the human health organism-only criterion is less stringent than the drinking water standard for benzene. However, EPA cannot apply the drinking water standard to effluent limitations in these permits unless such a standard is applicable. Since the Chelsea River is not a drinking water supply, a criterion for consumption of water is not applicable. Based on the designated uses defined in Massachusetts' WQSs and the promulgated water quality criteria, the human health organism-only criterion of 51 µg/L is appropriate.

Furthermore, the benzene limitations in the permits are concentration-based, rather than mass-based. As a result, a summation of the limits cannot be strictly compared to the criterion in determining if a limit will meet WQSs. If all facilities simultaneously and continuously discharge, and all discharge concentrations are 51 µg/L, and the concentration in the Chelsea River is 51 µg/L, then the resulting instream concentration with no dilution is 51 µg/L. This is more than an order of magnitude less than the 700 µg/L level at which acute effects on aquatic life have been documented. Additionally, if 700 µg/L were an acute criterion, it would not be comparable to an instantaneous maximum concentration, but rather, averaged over a specific interval, which is four hours for many acute criteria.

As discussed in the permits' fact sheets, each facility was subject to effluent limitations for benzene under their current permits. In developing water quality based limits for the reissued permits, EPA considered new information regarding the impairments to Chelsea River. While it is listed as impaired for petroleum hydrocarbons (through a qualitative assessment of a narrative description rather than measurements above a numeric criterion), it is not specifically listed as impaired for benzene. The highest concentration of benzene recorded in the Chelsea River within the previous three years is 2.4 µg/L. Over the previous three years, benzene was not detected at Global Petroleum Outfall 003, Global REVCO Outfall 001, Gulf Oil Outfall 003, and Sunoco Logistics Outfall 001. Benzene was detected in one of 12 samples at Chelsea Sandwich Outfall 001 (5.26 µg/L) and one of 6 samples at Irving Oil Outfall 001 (9.23 µg/L). Benzene was detected in two of 12 samples at Global South Outfall 001 (1.5 µg/L and 29.5 µg/L) and in 17 of 35 samples (ranging from 1.0 µg/L to 32.2 µg/L) at Global Petroleum Outfall 002. A three year period of review is noted because it is representative of current and future discharge concentrations and volume and aligns with recommendations in EPA's *Technical Support Document for Water Quality-based Toxics Control* for evaluating attainment of an acute or chronic criterion. As discussed in the permits' fact sheets, EPA completed a combined qualitative reasonable potential analysis in developing limits for benzene because of data quality issues (e.g., limited quantity of data, high proportion of non-detect data, high degree of uncertainty/variability in the available data). EPA also allowed no assimilative capacity in the receiving water.

Given the impairments to the Chelsea River for "petroleum hydrocarbons" and the characteristics which make benzene well-suited for use as an indicator parameter for the pollutant "petroleum hydrocarbons", EPA maintained numeric limits for benzene in the draft permits. Benzene is one of three indicator parameters used in combination to ensure that the discharges from the facilities do not cause or contribute to an excursion above WQSs for petroleum/petroleum hydrocarbons. Further, as the pervious permits contained numeric limitations for benzene, and no exception to anti-backsliding has been satisfied, EPA maintained numeric limits for benzene to meet requirements for anti-backsliding. EPA maintains that these limits are reasonable and sufficiently stringent to ensure compliance with applicable water quality standards as required by Clean Water Act Section 401(a)(2) and 40 C.F.R. §122.4(d). As EPA applied the water quality criterion for benzene as an indicator parameter for "petroleum hydrocarbons" at the end-of-pipe for each outfall, EPA believes this includes an adequate margin of safety to account for cumulative effects of benzene. With respect to EPA's evaluation of cumulative effects for all pollutants of concern for these permits, including benzene, also see Response to Comment C1.

This comment also appears in Part III., below. Regarding EPA's conclusion in the EJA, please see Part III.

Comments submitted by Dave Prusky, Chelsea resident:

Comment H1:

I'm a lifelong resident of Chelsea. And that's about 76 years now. So, I know where a lot of the bodies are buried, and many of them were dumped close by my house in recent years.

Here's my thought for the day. Is there any reason why these permits cannot include a requirement for these profitable companies to make their numbers available to the public? Early this morning, I tried to look this up. It's nowhere on the internet. In other words, all of these measurements of the outfalls, and measurements of the flow, there's nowhere that the public can access it. So, we don't know if the river is getting worse, better or just staying the same.

I would like to see each of these companies set up a web page, required in the permit, a web page that includes every measurement for all of these things, put it into a spreadsheet on that web page so that the public has a continuous view of what's going into the river. I think that would be fairly simple to do. Spreadsheets have been around since computers became available to the general public. Web pages are easy to do too, unless you happen to be the health authority at the federal level apparently.

That's what I would like to see. I want to know, is the river getting better, or is it getting worse. I have the feeling, based upon what was said today, that since pollutants are still allowed to go into the river that it is getting worse. And I don't believe that's what the Clean Water Act had in mind.

Response to Comment H1:

EPA understands that accessing environmental data can at times be cumbersome. Please see Response to Comment C2 for some of the key informational resources that provide the requested information. EPA continues to work to improve the systems through which the public can access such information. In these permits, EPA has enhanced transparency and public accountability regarding compliance and enforcement performance by requiring electronic reporting through NetDMR[42]. NetDMR is expected to increase the availability of compliance data to the public on a timely basis. Given the widespread interest in access to compliance information for these facilities, EPA has shortened the timeframe for how long a facility has to begin using NetDMR from twelve (12) months to six (6) months from the effective date of the permit. Several of the permitted facilities already use NetDMR.

However, the system into which compliance data are entered is not a spreadsheet-based program, as the commenter requests. Therefore, as reflected in the final permits, EPA is requiring the Permittees to post discharge monitoring data (including any reports) and the facility's Stormwater Pollution Prevention Plan (including annual certifications, updates and BMP implementation documentation) to their respective company's publicly-accessible internet webpage, to the extent practicable. If a permittee determines this requirement is impracticable, EPA anticipates requesting copies of SWPPPs be submitted to EPA for posting via its website. This information, when submitted to the Agencies and/or the municipalities in which the facilities are located, already required by the draft permits, becomes available to public through the administrative record. Also see Response to Comment B6.

EPA further encourages the permittees to expend effort to improve their relationships with the surrounding communities. EPA recommends permittees consider voluntary outreach efforts to the communities in which they are located. Such efforts may follow, for example, the public

[42] Currently accessed at http://www.epa.gov/netdmr/

notification requirement included in the nine minimum controls included in EPA's National Combined Sewer Overflow Control Policy (see 59 FR 18688 and Section 402(q) of the Federal Clean Water Act), the Public involvement activities required under the Massachusetts Contingency Plan (see 310 C.M.R. 40.1400), and recommendations described in Appendix A of EPA's *Watershed-Based National Pollutant Discharge Elimination System (NPDES) Permitting Technical Guidance*.[43] Such efforts are not mandated in the permits. However, EPA regards outreach efforts as a voluntary incentive factor to consider on a case-by-case basis under *Interim Guidance for Performance-Based Reduction of NPDES Permit Monitoring Frequencies* in the event monitoring frequency reductions are requested.[44]

EPA continues to look for effective ways to inform communities and interested persons about the compliance status of these facilities and the status of the Chelsea River. Currently, the Chelsea River remains impaired for the designated uses assigned by Massachusetts to a Class SB waterbody. Also see Response to Comment C2.

Comments submitted by Staci Rubin, Senior Attorney, Environmental Justice Legal Services Director, Alternatives for Community & Environment, Inc.

Comment I1:

Good evening. My name is Staci Rubin. I am the senior attorney and director of the Environmental Justice Legal Services Program at ACE, Alternatives for Community and Environment. ACE is providing legal services to residents in Revere, Chelsea and East Boston regarding the Draft NPDES Permits for the seven facilities that are the subject of tonight's public hearing. My comments tonight are on behalf of ACE. And we, along with the residents of Chelsea, East Boston and Revere will submit detailed written comments by May 12th.

Thank you to both EPA and DEP for holding tonight's hearing at a convenient location and providing translated documents in advance, as well as the interpretation for tonight's public hearing. I appreciate that EPA took the time to meet with ACE and members of the Chelsea Creek Action Group on three occasions in 2013, and held a community meeting last June about the NPDES process.

There is an anti-backsliding requirement for NPDES permits, which means that the requirements of a subsequent or newly issued permit may not be less stringent than previous permits. As has been said, the Chelsea Creek water quality continues to disappoint. The Commonwealth has classified the Chelsea Creek as a Class SB water body, meaning that its water quality should be able to support wading, swimming, fishing, boating and a health fish and aquatic life community. Yet, the water has not achieved this standard. No matter how far away this standard appears, the water quality should improve notwithstanding sanitary sewer overflows, combined sewer overflows and marine vessel pollution.

My remaining comments concern all seven permits. First, my comments concerning the permits from a technical perspective. The Chelsea River is listed as a Category 5 waters, which requires a

[43] EPA 833-B-07-004
[44] EPA 833-B-96-001

total maximum daily load on the final Massachusetts year 2012 Integrated List of Waters under the Clean Water Act. This is both Sections 303(d) and 305(b). The pollutants and conditions requiring a total maximum daily load are ammonia, fecal coliform, dissolved oxygen, polychlorinated biphenyls in fish, petroleum hydrocarbons and others. The designated uses for the Chelsea River are impaired. Sources of those impairments include the petroleum facilities at issue tonight. EPA and DEP state that the Draft Permit sufficient limit petroleum hydrocarbons and total suspended solids to ensure that discharges do not cause or contribute to the aquatic life impairment. EPA and DEP cannot make this statement because there is no total maximum daily load limits that have been set for the Chelsea River. These permits, all seven, should not be issued prior to establishment of the total maximum daily load limits. The state of Rhode Island recently established these limits for a portion of the Blackstone River. And that's a river that has endured heavy industrial use similar to the Chelsea Creek. The Commonwealth and EPA could incorporate this effort as a model. Further, the Mystic River Watershed Association has recorded data for the Chelsea Creek which could help establish a baseline for these numbers.

Should EPA and DEP disagree and decide to issue these final permits without first approving total maximum daily loads, then I respectfully request additional conditions for these permits. The pollutant scans for each facility outfall should be required quarterly, not annually. Including for ethanol, for facilities that store or manage ethanol. And the permittees should be required to conduct the pollutant scan, effluent testing at regular quarterly intervals. The permittees should be required to conduct the whole effluent toxicity testing quarterly, not annually. And the permittee should be required to report immediately when they exceed the total flow rate and the maximum daily flow rate. Furthermore, both EPA and DEP should conduct more frequent and unannounced inspections of all seven facilities, and issue fines when the facilities are out of compliance. All seven of the terminals have been out of compliance at least one quarter during the past five years. And to my knowledge, EPA or DEP did not take any enforcement action. The EPA should also establish a website specifically dedicated to the Chelsea Creek that includes updated information about current and past water quality tests and violation information.

In addition to the reasons I just discussed, the Draft Permits are inadequate because of their failure to consider climate change impacts. Section 316(a) of the Clean Water Act requires EPA to consider the change to the ambient water temperature in the Chelsea Creek because of an effluent discharge. Several of these facilities have boiler blow down from steam boilers, which would release more and more hot water into the creek. And that warming of the water needs to be considered in the climate change context. As water temperatures increase, water pollution problems will increase. As temperature increases, dissolved oxygen levels will be creating more complex environmental conditions which don't seem to be taken into consideration with these Draft Permits. Further, these permits are jointly issued by EPA and DEP as was said. And under General Laws of Massachusetts, Chapter 30, Section 61, in paragraph 2, DEP needs to make findings about reasonably foreseeable climate change impacts, which have not been done in the Draft Permits.

My next comments concern the Environmental Justice Assessment. While this particular Environmental Justice analysis is the most robust that I have seen out of Region 1, I think, more analyses are required. EPA recently developed a tool, CFERST, the Community Focused Exposure and Risk Screening Tool. That should be consulted to identify additional health

information, such as cancer rates, particularly for cancers that are known to be associated with benzene exposure. There should be some analysis of whether health indicators in the study area and the larger host cities demonstrate health inequities, whether there are -- the health of one racial or ethnic group is different than other racial or ethnic groups, and how those compare to the statewide average. And there should also be an analysis of water exposure and how contact with the contaminated water could affect human health.

Further, EPA concludes in its assessment that, because the effluent limits in the Draft Permits will ensure that the facilities do not contribute to water violations, this permitting action with therefore not disproportionately affect human health or the environment. This seems to be quite conclusory and it doesn't discuss how the effluent limits will improve water quality or remedy the past injustice of the environmental contamination. EPA should consider whether to require that signs be placed at the various access points to the creek. There are a few. But, whether those should be placed, and discuss the water impairments to the creek. Those signs should be available in multiple languages.

In conclusion, the communities that abut the facilities on the Chelsea Creek face not only an Environmental Justice burden, but a pollution burden of historical proportions. These permits must acknowledge this reality and incorporate the suggested changes so that conditions in the Chelsea Creek improve and contribute to environmental justice in Chelsea, East Boston and Revere.

Thank you for the opportunity to comment.

Response to Comment I1:

See Response to Comment C1 through Response to Comment C6, as the comments are substantially identical. This comment also appears in Part III., below. Regarding comments specific to EPA's EJA, please see Part III.

Comments submitted by Roseann Bongiovanni, Associate Executive Director, Chelsea Collaborative:

Comment J1:

Good evening. My name is Roseann Bongiovanni. I'm a Chelsea resident and I'm also the Assistant Director of the Chelsea Collaborative, which represents the Chelsea side of the Chelsea Creek Action Group. Thank you to the EPA and the DEP for being here this evening in Chelsea, and for making this presentation and for providing interpretation services for our community.

I also would like to thank the EPA for conducting an Environmental Justice analysis in correlation to these NPDES permits. In going through the EJ analysis, I had a comment that stood out to me. I was looking at the compliance and inspection history. Global Petroleum terminal had four violations. And yet, there are only two federal Clean Water Act inspections. Global REVCO terminal had three violations. And yet, there are only two Clean Water Act inspections from the federal government. Irving had five violations. And there are only three

federal inspections. Similarly, Chelsea Sandwich had two violations and only two inspections. And four violations for the Gulf Oil terminal and only one inspection. And all of these inspections happened over a five year time frame. So, in the course of five years, each of these facilities, the maximum time that they got inspected was four. So, less than once per year. And that was for Sunoco that actually had no violations. It's startling to me how few inspections from the EPA there are on these facilities. There are seven facilities. As you've heard from so many members of this body and others, these communities surrounding the facilities are Environmental Justice communities. And we need more regular inspections of these facilities. We're relying on the industries to tell us when they're in violation of their own permits. So, we're essentially trusting the word of the companies, and yet, not doing any enforcement, taking any enforcement actions, or following up with any inspections. I implore you, in these NPDES permits, to require more frequent inspections by the EPA, at a very minimum of twice per year of each of these terminal facilities. And I would encourage you to do those inspections on an unannounced visit rather than letting them know well in advance so that they can prepare adequately.

Further, I've learned from other communities in the nearby area that, when there have been violations of federal or state permits, the community has advocated that those companies in violation of their permits pay for consultants so that community groups, like the Chelsea Creek Action Group, could be better informed of what those violations mean and how those results are interpreted to the community. So, I would implore you to include those on these NPDES permits. That any time one of these industries is in violation of their permit that they either, one, pay towards a community enhancement or improvement project. Or two, that they provide for a consultant to translate these results to the community at large.

Similar to City Council President Frank, I want to encourage you to look at these permits, and as Madeline said as well, in a cumulative effect. You know, as we've heard, we're looking at each one of these permits in a silo, as if only -- as if there was only one terminal along the creek. There are seven terminals, seven terminals discharging pollutants all the time into the Chelsea Creek. And the only way that we can improve the Chelsea Creek is to have these permits be more and more stringent. The last time we issued these permits was in 2005. While there have been some changes and improvements made on these permits that you have shown as the Draft, we still feel like they're not stringent enough. They need to be far more stringent. We've gone almost 10 years. A lot has happened in 10 years. And these permits should reflect that. In 10 years' time, we want to be here saying that the Chelsea Creek is far cleaner than it was in 2014. And with the permits the way they are right now, we don't see that happening. The Chelsea Creek Action Group with the Mystic River Watershed Association and other organizations have been working very, very hard to improve the water quality of the Chelsea Creek, to reduce stormwater runoff, to reduce pollutants, to work with companies to be more accountable. And the only way we can deal with this holistically is if the EPA and DEP were to come down harder on these industries that are lining our waterfront.

Again, I want to thank you for coming here this evening. And I hope that, as you go back and review this data that, again, you think about Environmental Justice and this being an Environmental Justice -- all of these communities that are on the creek, being Environmental Justice communities, and that you take this opportunity as a significant step forward to say that

Environmental Justice is important and that we want to do the right thing to make these permits even more stringent.

Thank you.

Response to Comment J1:

With regard to compliance and inspection, refer to Response to Comment B8, Response to Comment C2, and Response to Comment E1. Monitoring requirements under the NPDES permitting program are designed to be "self-implementing" and "self-reporting". The permits require that the permittee's duly authorized representative certify the truth, accuracy, and completeness of all applications, reports and other information submitted to EPA. The Clean Water Act subjects permittees and individuals to criminal liability for falsifying these submissions. In addition, on-site inspections or EPA requests for documents provide opportunities for EPA inspectors to review records that are used to prepare submissions and these methods provide another mechanism for independently verifying submission accuracy. The "self-implementing" aspect of the program also means that the permittee is accountable for all aspects of the work to ensure compliance, including the selecting of contractors, paying for the work that is performed, and ensuring that such work is conducted and properly reported to the appropriate permitting authority. Under Part II. of the permits, the facilities are required to notify EPA and MassDEP within 24 hours from the time the permittee becomes aware of noncompliance circumstances that may endanger health or the environment.

To ensure compliance, the facilities are subject to inspection under multiple state and federal programs. Inspections of facilities with NPDES permits are performed by EPA Region 1's Office of Environmental Stewardship. EPA's Office of Site Remediation and Restoration also regularly inspects the bulk fuel storage facilities for their compliance with the Oil Pollution Act. Additionally, these facilities are inspected by MassDEP. Whether the inspection is announced or unannounced is determined by the type of inspection and the regulatory program under which the inspection is occurring. EPA's inspection frequency depends on such factors as the regulatory requirements of the program, the compliance history of the facility, the EPA resources available to perform inspections and the extent of competing environmental priorities. Monitoring results are reviewed with the goal of prioritizing inspections as well as for resolving any violations identified in a timely manner. EPA attempts to take all of the above factors into account when developing an appropriate inspection frequency. EPA enforcement and assistance staff may also use environmental justice as a factor in choosing sectors and facilities to address, and developing the appropriate inspection frequency.[45]

With regard to the requests for a technical expert to provide public notification to the communities and funding for enhancement or improvement projects, see Response to Comment C5.

[45] Also see EPA's *Plan EJ 2014: Advancing Environmental Justice Through Compliance and Enforcement* available at http://www.epa.gov/environmentaljustice/resources/policy/plan-ej-2014/plan-ej-c-e-2011-09.pdf; and http://www.epa.gov/environmentaljustice/plan-ej/ce-initiatives.html.

In reference to the comments submitted by the individuals referenced pertaining to cumulative effect, refer to Response to Comment F1 and Response to Comment G1. Also see Response to Comment C1. EPA has taken into account cumulative impacts in the development of these permits under the Clean Water Act, to the extent required by law, and to the extent necessary to ensure discharges comply with Massachusetts' Surface Water Quality Standards.

In accordance with 40 C.F.R. §122.44(*l*), the reissued permits contain no effluent limitations less stringent than the previous permits. On the contrary, the final permits contain multiple new effluent limitations and monitoring requirements that are more stringent than the previous permits. While a ten year period is noted for assessing the progress achieved through the permits, EPA notes that the permit term for these reissued NPDES permits is five years (see 40 C.F.R. §124.6(a)), at which point, in accordance with 40 C.F.R. §122.6(a), when EPA is the permitting authority, "the conditions of an expired permit continue in force under 5 U.S.C. §558(c) until the effective date of the new permit." In addition, these permits do not trigger an anti-degradation review under 314 C.M.R. 4.04 in accordance with 40 C.F.R. §131.12, as the authorized discharges are not new sources defined under 40 C.F.R. 122.29, nor has any increased discharge been authorized.

While the control of discharges from these point sources is significant to the water quality of Chelsea River, EPA does not concur that improvements to the water quality of Chelsea River are exclusively dependent upon the pollutant characteristics of effluent from these facilities alone. Additional point source and non-point source contributions have been documented as sources of the pollutants causing or contributing to impairments to the designated uses of the waterbody in the Mystic River Watershed and Coastal Drainage Area 2004-2008 Water Quality Assessment Report.[46] EPA considered these additional sources in its approach to WQBEL development, as described in detail in the permits' fact sheets and in Response to Comment C1, Response to Comment G1, and Response to Comment F1.

EPA appreciates Chelsea Creek Action Group's and Mystic River Watershed Association's efforts in the Chelsea River watershed and encourages the organizations and the communities to continue to engage in the NPDES process. EPA has reconsidered multiple aspects of the permits in view of the comments received during the public notice, including the public hearing. Multiple changes have been incorporated which provide further protection to the Chelsea River and surrounding communities. For example, see Response to Comment B2, Response to Comment B3, Response to Comment B6, and Response to Comment C1.

This comment also appears in Part III., below. Regarding comments specific to EPA's EJA, please see Part III.

Comments submitted by John Vitagliano, Winthrop resident:

Comment K1:

[46] Available at: http://www.mass.gov/eea/docs/dep/water/resources/71wqar09/71wqar09.pdf.

Thank you very much. My name is John Vitagliano. I live in Winthrop. I wanted to very briefly endorse exactly what Staci Rubin and Roseann Bongiovanni have stated for the record with respect to the permits.

I'd like to add one additional thought, if I might. As I've been reviewing what this proceeding is all about, it seems to me, what we're doing is asking for permission to endorse the seven oil terminals, to authorize them to discharge a certain amount of toxic pollutants into the Chelsea Creek up to a certain level, whatever level that might be. And to actually improve upon that to a substantial degree, I am suggesting that the entire system of oil water separation ought to be replaced by a zero discharge concept where the seven oil companies ought to be required by EPA and DEP to fully contain all of their contaminated liquid from their facilities, then put on tankers, their own tankers, and shipped to a facility where that contaminated liquid can then be processed accordingly, so that there would be no discharge whatsoever in the future by any of the seven oil terminals. And that ought to be an urgent matter and enforced onto the seven oil terminals by EPA and DEP.

Thank you.

Response to Comment K1:

With respect to comments submitted by the individuals mentioned, please see Response to Comment C1 through Response to Comment C5, Response to Comment I1, and Response to Comment J1.

EPA has the authority in accordance with various statutory and regulatory requirements established pursuant to the Clean Water Act, 33 U.S.C. §1251 et seq., the National Pollutant Discharge Elimination System (NPDES) program (see Section 402 and the implementing regulations generally found at 40 C.F.R. Parts 122, 124, 125, and 136) and applicable Massachusetts regulations (generally including 314 C.M.R. 3.00 and 314 C.M.R. 4.00) to include specific effluent limitations and other requirements such as monitoring and reporting in NPDES permits. However, EPA typically cannot dictate what measures the permittee must take to meet such permit conditions. When developing effluent limits for a NPDES permit, a permit writer must consider both limits based on the technology available to treat the pollutants (TBELs), and limits that are protective of the designated uses of the receiving water (WQBELs).

As explained in the permits' fact sheets, technology-based treatment requirements represent the minimum level of control that must be imposed under Sections 301(b) and 402 of the Clean Water Act (see 40 C.F.R. §125 Subpart A) to meet best practicable control technology currently available ("BPT") for conventional pollutants and some metals, best conventional control technology ("BCT") for conventional pollutants, and best available technology economically achievable ("BAT") for toxic and non-conventional pollutants. When technology-based National Effluent Limitation Guidelines ("ELGs") have not been promulgated, as is the case for these permits, EPA is authorized under Section 402(a)(1)(B) of the Clean Water Act to establish TBELs on a case-by-case basis using Best Professional Judgment ("BPJ").

To impose a zero discharge limitation that is technology-based, the BCT, BPT and/or BAT applied would be capable of achieving such levels of the pollutants present in the effluent. EPA determined that a zero discharge limitation, particularly for volatile organic compounds and polycyclic aromatic hydrocarbons, is not achievable using currently available pollution control technology. EPA made this determination based on a review of TBELs established using BPJ in EPA Region 1's RGP and/or TBELs promulgated under industrial categories for similar discharges with similar forms of treatment: 1) phase separation; 2) sedimentation; 3) filtration; 4) air stripping; and/or 5) carbon adsorption.

EPA established numeric and narrative effluent limitations achievable by applying one or more of these technologies, which are in use at all seven facilities. The rationale supporting the TBELs established using BPJ is included in the permits' fact sheets. While the permittees could chose to comply with the permit limits by shipping stormwater and/or wastewater off-site for treatment, EPA is not requiring that they do so. Off-site transfer and treatment of largely uncontaminated stormwater would be impractical, and would incur unreasonable costs relative to the environmental benefits. The treatment technologies appropriate to the types of effluent discharged from the facilities are widely available, effective and reasonably cost effective.

Under Section 301(b)(1)(C) of the Clean Water Act and EPA regulations, NPDES permits must contain effluent limits more stringent than TBELs where more stringent limits are necessary to maintain or achieve state or federal water quality standards. EPA would require a zero discharge limitation as a water quality-based limitation in an NPDES permit if it determined such a restriction is necessary to meet Massachusetts' Surface Water Quality Standards (WQSs) (see 314 C.M.R. 4.00). Massachusetts' WQSs for the classification assigned to the Chelsea River, Class SB/CSO, do not contain numeric or narrative criteria requiring a zero discharge limitation. However, based on the characteristics of certain types of process waters generated at these facilities, several discharges have been prohibited in the permits, essentially equal to a zero discharge. For example, discharges of tank bottom and bilge water, process waters which are known to contain high concentrations of multiple pollutants of concern, are not allowed. Also see Response to Comment G1.

EPA notes that because Massachusetts' classification of Sales Creek (Class SA/ORW) (see 314 C.M.R. 4.06) differs from that of Chelsea River (Class SB/CSO), no discharge of petroleum-related constituents has been authorized for the outfall discharging to that waterbody (Outfall 005 in Permit No. MA0003298, Global REVCO, LLC). EPA made the determination that to meet Massachusetts Surface WQSs, 314 C.M.R. 4.05(4)(a)(7) which states, "*[t]hese waters shall be free from oil and grease and petrochemicals"* the discharge could contain no measurable oil and grease and petrochemicals. Thus a numeric limitation equivalent to "no measurable" quantity for the oil and grease, VOC and PAH parameters was included in the permit. EPA equates these limitations to no measurable discharge, as any concentration is quantified to the extent possible, and to a degree approaching zero.

Although the commenter's recommendations regarding treatment for effluent have overall merit for these facilities, it is ultimately up to the permittee to decide on specific measures in this regard. However, EPA has determined a zero discharge limitation is not necessary to meet the requirements of the Clean Water Act and to ensure compliance with Massachusetts' WQSs.

<u>Part II. Comments submitted on individual draft permits as noted:</u>

<u>Comments submitted which pertain to Chelsea Sandwich Terminal (#MA0003280):</u>

Comments submitted by Michael A. Leon, Nutter, McClennen & Fish, LLP, on behalf of Chelsea Sandwich, LLC:

Comment L1:

Chelsea Sandwich appreciates the enormous effort that EPA devoted to preparing the draft permit, and finds that much of the content is reasonable and appropriate. Chelsea Sandwich believes, however, that certain provisions are inapt particularly in considering presently available information regarding the terminal.

In the balance of this letter, Chelsea Sandwich identifies the modifications it believes appropriate, and explains the bases for each.

Response to Comment L1:

EPA notes the comment.

Comment L2:

Comment 1 – The proposed discharge limits and sample parameters must be related to the discharge reasonably expected from a facility.

EPA must have a rational basis for determining a facility's discharge limits and sampling parameters. EPA improperly relies upon Section 308 of the Clean Water Act to provide authority to require reporting of information necessary to establish appropriate discharge limits. EPA, through reporting requirements, seeks to determine if discharge limitations are necessary in the future. However, the basis for establishing reporting requirements should be to limit and treat the constituents known to exist in the groundwater, soil and other surficial areas at a facility or the discharge from that facility that may impact the receiving waterbody. The sampling parameters and frequency should not encompass potential substances that have no connection to the discharge, have not been detected at a facility, are not in use at or in processes at a facility, or which are not under the control of a permitted operator. The following changes should be made to the final permits.

A. Monitoring for chromium, iron, cyanide, phenol, phthalates, ammonia and fecal coliform should be deleted.
    - Chromium, cyanide and phenols are generally emitted by coating or plating processes. Chelsea Sandwich is unaware of any historic process at the terminal that used these constituents, or of any sample data that suggests these constituents are present in the stormwater discharge from the terminal. As these substances are

not actually present at the terminal and are not used or stored at the terminal, there is no basis to require testing for them.

- Global is unaware of any past process activities that released iron at the terminal. As noted by EPA in the facts sheets, iron occurs naturally in the soils in the area. As there is no evidence that iron impacts the stormwater discharge above expected background levels, there is no basis to require testing for iron.
- Phthalates are generally associated with plastic manufacturing. Chelsea Sandwich is unaware of any historic process at the terminal that used phthalates, or of any sample data that suggests phthalates are or have been present in the soil, groundwater or stormwater discharge from the terminal.
- Fecal coliform testing should not be required as there is no process or sanitary discharge to the outfall at the terminal. While the Chelsea River is impaired for its designated uses, and fecal coliform is a pollutant requiring a TMDL, there is no evidence to suggest that the terminal is or has been a source.
- Should EPA elect to not adopt the above approach, Chelsea Sandwich proposes in the alternative that the sampling for these constituents be conducted in the first year, but for each constituent that is not detected above background levels, nothing thereafter.

B. If, following the first required WET Test, it is shown that the discharge from the terminal has the same or greater survivability of the target species than that of the Receiving Water (Chelsea Creek), the proposed annual testing should be changed to require testing only every three years.

C. The frequency of any monthly sample parameter reported by the analyzing laboratory as not detected in a given discharge over a twelve (12) month sampling period should be automatically amended to require only quarterly sampling.

Response to Comment L2:

With regard to item A., Sections 101, 301(b), 304, 308, 401, and 402 of the Clean Water Act provide the basis for the effluent limitations and other conditions in the permits. EPA evaluates discharges with respect to these sections of the Clean Water Act and the relevant NPDES regulations to determine which conditions to include in the draft permit. This includes consideration of pollutants or parameters not only known to be present in a discharge, but also those pollutants or parameters that may reasonably be present depending upon, among other things, the type of facility, pollutant sources, and the type(s) of effluent discharged. CWA §308(a), 33 U.S.C. §1318(a), authorizes EPA to require the owner or operator of any point source to provide information as may reasonably be required to:

> ... carry out the objectives of ... [the Clean Water Act], including but not limited to: (1) developing or assisting in the development of any effluent limitation, or other limitation, prohibition ... or standard of performance under [the Clean Water Act] ...; (2) determining whether any person is in violation of any such effluent limitation, or other limitation, prohibition or effluent standard, ... or standard of performance; (3)any requirement established under

> this section; or (4) carrying out section ... 1342 ... of [the Clean Water Act] ...

EPA evaluated the discharge to determine compliance with Section 301(b)(1)(C) of the Clean Water Act by establishing limitations and monitoring requirements necessary to meet water quality standards. The regulations at 40 C.F.R. §122.44(d)(1) implement section 301(b)(1)(C) of the Clean Water Act. These regulations require that NPDES permits include limits for all pollutants or parameters which "are or may be discharged at a level which will cause, have the reasonable potential to cause, or contribute to an excursion above any State water quality standard, including State narrative criteria for water quality." When information is insufficient to make this determination, as EPA's *Technical Support Document for Water Quality-based Toxics Control* recommends, the collection of this information is required, either through an information request during permit development, if time allows, or incorporated into permit conditions.[47]

Therefore, EPA determined which pollutants are of concern for the facilities. First, EPA reviewed the existing permits to determine if current limitations were adequate and whether monitoring conducted during the permit term indicated additional limitations were required. EPA included limits or conditions for both conventional pollutants (e.g., total suspended solids and oil & grease) and non-conventional and/or toxic petroleum-related compounds, including the volatile organic compounds (e.g., benzene), polycyclic aromatic hydrocarbons (e.g., benzo(a)pyrene and naphthalene), oxygenates (e.g., methyl-tert-butyl ether and ethanol) and residuals (e.g., cyanide) in the permits, based on site-specific product storage, processes, reported releases, monitoring results, and historic uses.

Second, EPA reviewed each permittee's permit renewal application, including analytical data. EPA noted concentrations of certain metals and ammonia at levels that exceed or could potentially exceed applicable criteria. In this review, EPA identified ammonia, iron, lead and cadmium as pollutants of concern. Ammonia, for which the Chelsea River is impaired, was reported at a concentration of 2.31 mg/L, whereas the recommended chronic criterion value is 2.4 mg/L. Further, while iron compounds can be naturally occurring in groundwater, excessive amounts may cause or contribute to violations of water quality standards for color, turbidity, solids, and odor, as well as fouling of the discharge treatment systems. Iron is also present in *de minimis* quantities in certain petroleum products. The applicable criterion for iron, as promulgated under the National Recommended Water Quality Criteria, is an organoleptic criterion set at 300 µg/L. The facility reported an iron concentration of 804 µg/L at Outfall 001 and 403 µg/L at Outfall 002. Other metals detected in the facility's effluent as reported in the permit renewal application include barium, cadmium, lead, and selenium. All are present in petroleum products stored at the facility.[48] Therefore, EPA included additional monitoring requirements for the above listed pollutants, except barium and selenium. Barium does not have an applicable water quality criterion and is not a priority pollutant. Selenium was detected at very low concentrations well below applicable aquatic life criteria. Since lead and cadmium monitoring is already required for whole effluent toxicity testing, testing for these constituents were not added as a separate requirement.

---

[47] See Chapter 3 of EPA/505/2-90-001.
[48] See EPA/600/R-03/072 and EPA 745-B-00-004.

Third, EPA evaluated pollutants with the potential to enter the stormwater conveyance system through infiltration of contaminated groundwater, through stormwater contact with contaminated soil and/or sediment, or via the discharge of hydrostatic test water or boiler blowdown. These pollutants were identified primarily through documentation in MassDEP's records for this facility under the Massachusetts Contingency Plan and/or EPA Region 1's Remediation General Permit although a review of former operations at the facility that may have impacted soil or groundwater and the nature of process discharges was also done. In this review, EPA identified chromium and cyanide as pollutants of concern related to identical types of discharges, including hydrostatic test water, covered under EPA's Remediation General Permit. EPA noted in the permits' fact sheets that chromium had also been included in Whole Effluent Toxicity testing prior to the recent protocol revision. As the facility did not conduct this testing prior to the revision, based on testing at nearby facilities, this parameter was maintained. Cyanide was further noted in EPA's review of records for this facility under the Massachusetts Contingency Plan given the releases of fuel oils and the parameters limited for this type of release under EPA's Remediation General Permit. Phthalates were noted in EPA's review of past operations, given the former use as a coal storage facility and the association between phthalates and coal. Phthalates, along with multiple metals, nitrogen and phosphorus, were also noted in the compositional characteristics of boiler blowdown, an effluent stream from the facility for which EPA otherwise lacks monitoring data.[49] Metals and nutrients are discussed further, below.

Fourth, EPA thoroughly reviewed the development document published for National Effluent Limitations Guidelines for the petroleum refining point-source category, for which Bulk Petroleum Storage Terminals and Stations were considered for inclusion,[50] and supporting documents for similar industrial sectors, including the Steam Electric Power Point Source Category, in which multiple pollutants of concern are identified in effluents from bulk petroleum storage facilities and are present in petroleum products stored at these types of facilities.[51] Supplemental pollutant-specific information, as noted in the permits' fact sheets, was also reviewed as needed.[52] In review of these documents and supplemental information, EPA identified cadmium, chromium, copper, iron, lead, nickel, phenol and zinc as pollutants of concern, which are present in petroleum products.[53]

Finally, EPA considered pollutants for which the Chelsea River is impaired, but no effluent data have been collected, particularly given the changes to the 303(d) listing for Chelsea River segment MA71-06 since the issuance of the current permit. In this review, EPA identified ammonia and fecal coliform as pollutants of concern. In the Final 2012 Massachusetts Impaired Waters List (303(d) list) approved by EPA in May 2013, MassDEP identified over two thousand impairments in over seven hundred water body segments still requiring TMDLs. Roughly half of

---

[49] See *Appendix A, Boiler Blowdown: Nature of Discharge for the "Phase I Final Rule and Technical Development Document of Uniform National Discharge Standards (UNDS)."* EPA-842-R-99-001; April 1999.
[50] See *Technical Support Document for the 2004 Effluent Guidelines Program Plan*; EPA-821-R-04-014: August, 2004.
[51] See EPA 745-B-00-004, September 2000.
[52] As a partial reference, see pollutant-specific criteria documents for *National Recommended Water Quality Criteria*, EPA's "Gold Book" (EPA 440/5-86-001, May 1, 1986), EPA's "Red Book" (PB-263 943, July, 1976), and Agency for Toxic Substances and Disease Registry Toxicological Profiles for pollutants of concern via http://www.atsdr.cdc.gov/toxprofiles/index.asp
[53] As a partial reference, see EPA/600/R-03/072 and EPA 745-B-00-004.

these impairment-water body segment combinations were related to stormwater pollution, including, but not limited to, impairments for bacteria, excess algal growth, nutrients, sedimentation, and dissolved oxygen. Urban stormwater runoff, like that which is discharged from the facility, is well documented as a leading cause of impairment of freshwater lakes, rivers, and estuaries.[54] Further, multiple pollutants of concern are contained in urban stormwater runoff like that which is discharged from the facility, including the following major constituents: nutrients (nitrogen and phosphorus), bacteria/pathogens, chloride, solids, oil & grease (hydrocarbons), and metals.[55]

Once the pollutants of concern were identified, EPA determined applicable technology-based limits and appropriate WQBELs. The draft permit limits reflect whichever limits (technology-based or water quality-based) are more stringent. Where EPA was unable to determine if certain parameters had reasonable potential to cause or contribute to an excursion above water quality criteria because of a significant lack of information, as was the case for chromium, iron, cyanide, phenol, phthalates, ammonia and fecal coliform noted above, the draft permits require monitoring, without limits.

Because chromium, iron, cyanide, phenol, phthalates, ammonia and fecal coliform have not previously been monitored in the facility's discharges or available monitoring data are insufficient for EPA to make a definitive determination, and as the commenter has submitted no quantitative factual basis demonstrating that these pollutants are not present at the facility at levels that cause or have reasonable potential to cause or contribute to an excursion above water quality criteria, EPA cannot assume they are absent given the types of materials stored at the facility (e.g., fuel oil), historical uses at the facility (e.g., coal storage), processes at the facility (e.g., hydrostatic testing and boiler blowdown), and/or pollutants identified as causing impairments to the receiving water (e.g., petroleum hydrocarbons, un-ionized ammonia and fecal coliform). Section 308(a)(3)(A) of the Clean Water Act authorizes EPA to require reports, monitoring equipment or methods, expanded sampling, or any other information that would help establish or determine compliance with effluent limits, prohibitions, effluent standards, pretreatment standards, or standards of performance under the Clean Water Act. EPA determined further monitoring is necessary in order to evaluate the effluent from the facility with regard to certain pollutants associated with petroleum products and urban industrial sites. Further, EPA has required the facility to gather more data to ensure the stormwater discharges do not impact the water quality of the Chelsea River or pose a risk to human health or the environment. Therefore, the additional monitoring requirements in the permits are included for specific regulatory use in carrying out the Clean Water Act. EPA's ability to exercise its legitimate regulatory authority granted in Section 308 to gather information in order to determine the concentrations of pollutants discharging into the Chelsea River at the facility is of paramount importance to human health and the environment. EPA's decision to include industry-specific, site-specific and/or receiving water-specific parameters in the permit is reasonable and consistent with its responsibilities under the Act, particularly given the highly urbanized nature of the watershed above the discharge and the nature of impairments in the receiving water. EPA expects the frequency of this sampling to reduce with time, assuming pollutants are not detected.

---

[54] US EPA, 2009; National Research Council, 2008.

[55] Center For Watershed Protection, 2003; US EPA, 1999; Shaver, et al., 2007; Lin, 2004; Schueler, 2011; Pitt, et al., 2004; Clark & Pitt, 2012; National Research Council, 2008.

With regard to item B., when determining whether there is reasonable potential for a discharge to cause or contribute to an excursion from water quality standards, EPA uses three approaches: biological assessment, chemical specific criteria, and WET testing. Since each type of approach has different sensitivities and purposes, a particular approach may fail to detect impairments when used alone. As a result, these methods are used together in an integrated water quality assessment, each providing an independent evaluation of nonattainment of a designated use. Therefore, if any one type of criterion indicates impairment of the surface water, regulatory action can be taken to improve water quality. WET testing is used to determine the aggregate toxic effect to aquatic organisms from all pollutants contained in a facility's wastewater effluent. The existing tests, as provided by agency regulation and guidance, are appropriate indicators of toxicity associated with the discharges. Further, MassDEP's *Implementation Policy for the Control of Toxic Pollutants in Surface Waters* includes whole effluent testing requirements as part of its interpretation of the narrative criteria. Specifically, WET testing is used to ensure the aquatic life criteria are met with respect to effluents that could contain chemicals that may be overlooked in chemical-specific testing, chemical that have additive, synergistic or antagonistic effects, or toxic pollutants with variable bioavailability. Despite the likelihood that all of the noted instances apply to the facility's discharges based on the characteristics of the pollutants of concern, WET testing has not been previously required at the facility. As a result, EPA is unable to determine if limitations for toxicity are necessary to meet water quality standards. Given the impairments to the Chelsea River and the pollutants and sources identified in support of the listing for these impairments, EPA determined that WET testing is warranted. Further, WET testing addresses the monitoring need for additional pollutants of concern identified above, which were not individually required in the Pollutant Scan.

A single sample, such as the Permittee suggests, is not sufficient to determine effluent variability or make an informed decision regarding compliance with water quality standards. In response to comments received, EPA has increased the WET test frequency for the first three years of the permit term. Three years represents EPA's *Technical Support Document for Water Quality-based Toxics Control* recommendation for ascertaining the attainment of both acute and chronic effect for both chemical-specific and whole effluent approaches,[56] the recommendation for a minimum data set of 8 to 12 samples for evaluation of pollutants of concern[57] and 10 or more samples for statistical analysis.[58] However, after this period, EPA agrees that WET testing frequency may be reduced or eliminated. The final permit specifies the requirements for such reduction or elimination, namely, elimination is not warranted if WET testing is not completed using the receiving water as the diluent. While an alternate dilution water can still demonstrate the effect of the effluent alone, use of the receiving water can demonstrate the effect of the effluent in combination with existing conditions, which EPA believes is necessary to ensure compliance with water quality standards given the impaired status of the Chelsea River.

With regard to item C., the establishment of new effluent limitations in the permit for indicator parameters, required at a monitoring frequency of monthly, are based on the impairments to designated uses for the Chelsea River and updated assessment information for the receiving

[56] See Chapter 2; EPA/505/2-90-001: March 1991.
[57] See Chapter 3; EPA/505/2-90-001: March 1991.
[58] See Appendix E; EPA/505/2-90-001: March 1991.

water, pertaining to limitations for the indicator parameters for petroleum/petroleum hydrocarbons, benzene, benzo(a)pyrene and naphthalene. Until these limits go into effect, and the permittee has incorporated the additional requirements in the permit, particularly as they pertain to Best Management Practices, a determination of effluent quality is incomplete. Furthermore, non-conventional parameters required at a monthly monitoring frequency have been continued from the current permit. Reductions in monitoring frequencies are not warranted when a permittee has not demonstrated compliance with effluent limitations, nor are reductions warranted below a frequency necessary to determine compliance. As noted in Response to Comment B3 above, a monitoring frequency of quarterly does not yield data with an expected level of confidence sufficient to evaluate compliance with water quality standards. In addition, in order for EPA to determine the long-term average of these parameters in accordance with guidance set forth in the *Technical Support Document for Water Quality-based Toxics Control* (EPA/505/2-90-001), a minimum of three years of data is recommended. Further, EPA does not believe quarterly sampling for toxic pollutants limited by human health criteria is sufficient to determine compliance with water quality standards where the compliance measure is an average monthly limit set equal to the criterion, particularly since analytical measurements cannot demonstrate that effluent concentrations do not exceed the limitation. EPA's *Interim Guidance for Performance-Based Reduction of NPDES Permit Monitoring Frequencies* advises that where an effluent limitation is less than the capability for measuring a pollutant, as well as the instance where a discharge is of significant human health concern, such as where limitations based on human health criteria are necessary to meet water quality standards, no monitoring frequency reductions be allowed.

Further, quarterly monitoring does not adequately characterize effluent variability of intermittent, short-term and/or batch discharges where the standard deviation is relatively high and the coefficient of variation (ratio of standard deviation to the mean) cannot be reasonably estimated. Further, decreasing the number of samples only increases the uncertainty associated with this variability and thusly the uncertainty that the corresponding limit is actually being attained. EPA's *Interim Guidance for Performance-Based Reduction of NPDES Permit Monitoring Frequencies* describes that for data exhibiting a coefficient of variation (ratio of standard deviation to the mean) of 0.20 or less and no monthly average limit violation for the appropriate averaging period, which is recommended for a minimum two year period, except where effluent data have not been continuously reported or which is interrupted or discontinuous, intermittent, short-term, or based on batch discharges, less frequent monitoring can be appropriate to determine compliance with a limit, reductions may be considered. Where effluent data are intermittent (as is the case for stormwater discharges), short-term (as is the case for hydrostatic test water discharges), or batch (as are groundwater remediation effluent and boiler blowdown discharges), more than two years of effluent data are recommended. As noted above, EPA's TSD recommends a three year return interval, noted as roughly equivalent to a 7Q10 design flow condition with some consideration of rates of ecological recovery from a variety of severe stresses. Therefore, the monthly frequency for these parameters remain unchanged and no monitoring frequency reductions may be considered for a minimum of the first three years following the effective date of the permit.

In sum, EPA believes that the effluent limits, monitoring requirements, and non-numeric TBELs, including BMPs, are the appropriate means to effectively characterize discharges from the

facility and provide the information needed to determine if additional permit conditions are necessary to ensure compliance with water quality standards. However, EPA agrees that monitoring frequency for certain pollutants required in the effluent pollutant scan and/or whole effluent toxicity testing may be reduced or eliminated after collection of representative data. Since EPA has increased the sampling frequency of the parameters related to the pollutant scan and whole effluent toxicity testing (see Response to Comment B3 and Response to Comment C2, above), the final permits include the provision for reduction or elimination in monitoring frequencies of non-limited pollutants and reduction in monitoring frequencies for limited pollutants after the first three years following the effective date of the permit, provided sampling results meet eligibility requirements. As described, three years represents the minimum long term averaging period EPA uses in accordance with EPA's *Technical Support Document for Water Quality-based Toxics Control* and generates the minimum number of recommended samples for evaluating pollutants of concern.

The final permits do not include automatic reductions in the testing frequency of limited parameters, however, as EPA believes it appropriate to evaluate compliance on a parameter-by-parameter and case-by-case basis. For performance-based monitoring reductions, EPA follows the *Interim Guidance for Performance-Based Reduction of NPDES Permit Monitoring Frequencies*. This guidance advises a minimum two years of continuous data to determine the long-term average, necessary to complete analyses following EPA's TSD. Furthermore, at this time, analytical methodologies are insufficient to determine compliance with the effluent limitation included in the permit for benzo(a)pyrene, for which no monitoring reductions are allowed. Therefore, EPA believes the monitoring frequencies specified in the permit must remain in effect for a minimum of three years before performance-based monitoring reductions can be considered. The permit specifies that the permittee may request a monitoring frequency reduction after this period. Such a request must include rationale regarding the representativeness of data and any measures the permittee has taken to ensure discharges of pollutants for which monitoring reductions are requested would be expected to persist at or below levels measured in performance data.

Comment L3:

Comment 2 – The installation of totalizers or flow meters should not be required.

EPA should amend the draft permit to continue use of the current method of determining flow rate rather than requiring installation of flow meters at the outfall. Stormwater discharge metering is unnecessary as the terminal impounds all stormwater before pumping to an oil/water separator ("OWS") prior to discharge. EPA's intent in requiring metering, as discussed in the fact sheets, is to ensure that flow into the OWS does not exceed the design flow capacity of the OWS, thus rendering it ineffective. Because the rate of influent to the OWS is always controlled by pump rates, the throughput capacity cannot be exceeded.

Chelsea Sandwich currently determines flow to the terminal's OWS by recording the hours of operation of the discharge pump associated with the terminal's OWS. The hours of operation are recorded through a timer on the discharge pump. The total discharge flow rate is then calculated as the product of pump maximum discharge rate (capacity) and its operating time in hours. This

method likely overestimates the total flow rate to the OWS, keeping the actual flow in compliance with permit discharge limits. It also ensures that the flow rate into the OWS does not exceed the design capacity. As the terminal flows have not exceeded the design capacity of the OWS at any facility, installation of the flow meters is not necessary.

In addition, Chelsea Sandwich notes that installation of a totalizer, which would measure the total output of a certain discharge over a period of time (for instance, a month), would not provide any safeguard against an exceedance of the design capacity of the OWS. Rather, a totalizer would just provide the total volume that was discharged.

Finally, Chelsea Sandwich has concerns that installing totalizers on the flow would be ineffective due to blockages, freezing or calibration issues. Such mechanical issues will not provide the required assurances that OWS design capacity has not been exceeded, which appears to the goal of EPA as stated in the fact sheet.

EPA should amend the draft permit and allow the flow rate to be calculated in the same manner as the 2005 permit. Chelsea Sandwich will continue to maintain records regarding flow rates, and will notify EPA of any modification to the impoundment system that would result in changes to the discharge to the OWS. This method will continue to allow for proper operation of the OWS and keep flow into the OWS below design limitations.

Response to Comment L3:

The commenter misunderstands the permits' fact sheet. Section 7.1 of the fact sheet for the draft permit (page 14) states, "During the 2005 Permit term, a flow meter was installed to record the volume of treated effluent discharged via Outfall 001. The Draft Permit has added a requirement that the flow rate and total flow continues to be measured using such a device." EPA maintained the *daily maximum flow rate limit* to ensure the design flow capacity of the OWS is not exceeded. As flow rates are typically estimated using pump curves, the final permits have clarified that the use of a flow meter is not required for recording the flow rate of discharges.

However, the requirement for use of a flow meter remains in the final permits for recording the total flow. Chelsea Sandwich stated in its application that a flow meter was installed during the previous permit term to determine the actual volume of effluent discharged through Outfall 001 (see Page 13 of tab number 3 of the renewal application). The permit requirement to continue use of this flow meter was incorporated to continue collection of actual volume information. This information is critical to evaluation of pollutant loading from the facility to the receiving water to ensure that the discharges do not cause or contribute to an excursion above water quality standards.

EPA is aware of multiple bulk petroleum storage facilities in the Boston Harbor drainage system that utilize flow meters to monitor their effluent and have not reported such devices to be ineffective due to blockages, freezing or calibration issues. The various specifications in widely available devices indicate that multiple types of meters are capable of recording the required parameter with minimal maintenance. However, EPA understands that the facility may not utilize a flow meter that satisfies the requirement of the permit. Therefore, the Final Permit

stipulates that the facility will have 180 days from the effective date of the permit to modify their current device and/or configuration, if needed. In the interim, the permittee may continue to report the flow rate and total flow as an estimate, determined using the method described in the comment. Notification regarding the completion of device and/or configuration changes is also required.

Comment L4:

Comment 3 – EPA should clarify the bases for reopening a permit.

The final permit should provide for notice and comment by the permit holder prior to EPA reopening a final permit. The draft permits each contain a reopener clause that allows modification to the permits at any time pursuant to 40 C.F.R. §122.62. Section 122.62 provides wide-ranging authority to reopen a permit for modification, including among other things substantial alteration to a facility, new information regarding operations, promulgation of new standards or regulations, judicial decision and detection of non-limited pollutants above levels that can be achieved by appropriate technology-based treatment methods. A modification can be either minor, which does not require a new draft permit or public comment period upon the consent of the permittee, or require the more burdensome issuance of a new draft permit if the modification does not qualify as minor under 40 C.F.R. §122.63. Section 122.62 also allows reopening in limited circumstances, such as noncompliance, for revocation or reissuance.

As Section 122.62 provides wide discretion for EPA to reopen the permits for a wide variety of reasons, the final permit should contain a provision that EPA will notify a permit holder prior to reopening a permit, allowing for discussion and comments on the rationale for reopening, the nature of proposed revisions and the potential to resolve a proposed revision as a minor modification, prior to a decision to issue a draft permit or open the matter to the public.

Response to Comment L4:

Federal regulations pertaining to permit modification, revocation and reissuance, and termination are found at 40 C.F.R. §§122.62, 122.63, 122.64, and 124.5. In most cases, a permit will not need to be modified (or revoked and reissued) during the term of the permit.
Permit modifications are limited to specific *causes* identified in §§122.62(a) and 122.62(b), most of which are summarized in Exhibit 11-10 in Section 11.4.2 of EPA's NPDES Permit Writer's Manual.[59] Most NPDES permit modifications require the public notice and participation activities of Part 124, similar to the issuance or reissuance of the permit; however, only those specific conditions being modified are open to review and comment. Modifications differ from revocations and reissuance. In a permit modification, only the conditions subject to change are reconsidered while all other permit conditions remain in effect. Conversely, the entire permit could be reconsidered when it is revoked and reissued. The permitting authority may revoke and reissue a permit during its term for the causes identified in §122.62(b). EPA informs the permittee prior to major modification, revocation and/or reissuance and discussion, to the extent appropriate and allowable by law, may occur.

[59] EPA-833-K-10-001, September 2010

There are certain minor modifications that, upon consent of the permittee, may be processed by the permitting authority without following the procedures for public notice in Part 124. Minor modifications are generally non-substantive changes (e.g., correction of typographical errors, incorporate more frequent monitoring or reporting, delete a point source outfall when that outfall is terminated, and to record a change in ownership) and are exempt from the administrative procedures; that is, a draft permit and public review are not required. The specific permit changes that can be processed as minor modifications are described in §122.63.

Comment L5:

Comment 4 – EPA should provide a concise definition of PQL.

EPA should define PQL as it is used in the draft permits. For example, during the April 17, 2014 informational meeting and public hearing on the draft permits, EPA stated the proposed benzo(a)pyrene compliance limit is the detection limit and not the number (0.018 µg/L) which is provided in the Effluent Limitation and Monitoring Requirements.

Chelsea Sandwich has concerns regarding certifying discharge monitoring reports as being compliant when the required laboratory analyses cannot meet the Effluent Limitation. The reporting of an amount above the actual discharge limitation, but below the MDL, will result in confusion, potential issues with NetDMR and the potential for a discharge to be found out of compliance.

As the proposed Limitation and Monitoring Requirement is in some instances below the detection limit, EPA should adopt the present method detection limits as the effluent limits. EPA can then amend the discharge limit as sample technology improves, thus lowering the detection limits.

Response to Comment L5:

EPA refers to the "detection limit" in the draft permits and fact sheets as a practical quantitation limit ("PQL"). The definition of the PQL, as it is being used, is the lowest concentration that can be reliably measured within specified limits of precision and accuracy for a specific laboratory analytical method during routine laboratory operating conditions. The PQL is a measured value equal to or greater than the method detection limit ("MDL"), the level at which an analyte can be measured and reported with 99-percent confidence that the concentration of the analyte is greater than zero. EPA does not refer to the MDL in the permits or fact sheets. However, PQL can be used to refer to a specific multiple of the MDL. The Federal Advisory Committee on Detection and Quantitation Approaches,[60] proposed the conceptually equivalent term, detection limit ("DL"), to refer to the lowest result that can be reliably distinguished from a blank and is the normal censoring limit for analytical result reporting (i.e., a result at or above the DL is reported as a specific value where a result below the DL is reported as having not been detected). EPA has retained the term PQL in the final permits and has added a concise definition to be

[60] *Report of the Federal Advisory Committee on Detection and Quantitation Approaches and Uses in Clean Water Act Programs*. EPA Office of Science and Technology Final Report: December 2007, 176 p.

complimentary to the inclusion of the concise definition of minimum level ("ML") included in the draft permits.

It is unclear when EPA referred to the compliance limit for benzo(a)pyrene as being the "detection limit". This statement did not occur during the public hearing as it is not part of the hearing transcript included in the administrative record. The compliance level for benzo(a)pyrene is not specified as the PQL in any of the seven permits. Rather, the compliance level for benzo(a)pyrene is specified as the ML as recommended in EPA's *Technical Support Document for Water Quality-based Toxics Control*. Further, the compliance level for all parameters with numeric effluent limitations, if different from the numeric limit, is specified in all seven permits as the ML. The ML is not a measurement, but the acceptable minimum calibration point for analysis.

Compliance levels are specified in all seven permits for benzo(a)pyrene and in the Global REVCO, LLC permit for oil & grease, benzene, benzo(a)pyrene, and naphthalene for Outfall 005. For this facility, an ML is specified as the compliance level in the footnotes in Part I.A. of the permits for benzo(a)pyrene. PQLs do not apply to any effluent limitation in any of the permits, with the exception of Outfall 005, Global REVCO, LLC. Where the PQL is equal to the numeric limit, a compliance level is also specified. EPA guidance recommends use of the ML for compliance purposes when a permit limitation is less than the PQL, as is the case for Global REVCO, LLC. Outfall 005. MLs and/or PQLs, but not compliance levels, are specified for analysis of monitoring-only parameters included in the Whole Effluent Toxicity testing and Pollutant Scan, to ensure the permittee uses sufficiently sensitive analytical methods for sample analysis.

EPA has included the limitations, minimum levels, compliance levels, PQLs, and/or analytical methods as specified in EPA guidance.[61] For benzo(a)pyrene, provided the permittee meets the compliance level specified in the permits, discharges are not considered violations. As in the example noted in the comment where an "estimated value" is reported by an analytical laboratory when an analyte is detected below the PQL, 0.05 µg/L, the estimated value may be above the limit, 0.018 µg/L but will be below the compliance level (i.e., ML), 0.1 µg/L, so is not be considered a violation. If a result is below the PQL, 0.05 µg/L, and no estimated value is given, the required value to be reported is <0.05 µg/L. While potentially above the limit, 0.018 µg/L, this is below the compliance level, 0.1 µg/L, so it is not considered a violation. Similarly, if a value is above the PQL, 0.05 µg/L, but below the compliance level, 0.1 µg/L, while this is above the limit, 0.018 µg/L, it is not considered a violation. However, if a value is reported above the compliance level, 0.1 µg/L, it is a violation. The final permits include the applicable terms in the footnotes in Part I.A., including the applicable compliance level, where necessary.

Comment L6:

Comment 5 – EPA should relieve permit holders from accounting for background chemicals in pretreated City water.

[61] See EPA/505/2-90-001, March 1991.

Chelsea Sandwich uses water directly from the City for hydrostatic testing at the terminal. Because this water is pretreated to state drinking water standards, Chelsea Sandwich requests that the final permits relieve Chelsea Sandwich from any requirements to account for background chemical concentrations detected in the incoming water.

Response to Comment L6:

EPA agrees that the municipal water supply is not likely to contain the majority of pollutants of concern for the facility and receiving water. Therefore, influent testing is required only in the instance where municipal water supply is not the fill source. However, several pollutants of concern are known to be present in municipal water supplies in Massachusetts that are pollutants of concern for the facility and receiving water. Therefore, EPA has retained monitoring for certain parameters when potable water supply is used for testing. The monitoring requirement for influent has been modified where municipal water supply is used in hydrostatic testing, (Part I.A.15.).

Therefore, the only additional pollutant retained for effluent monitoring when municipal water supply is used for the source water in hydrostatic testing is total residual chlorine. 40 C.F.R. §141.72 stipulates that a public water system's residual disinfectant concentration in the water entering the distribution system cannot be less than 0.2 mg/l for more than 4 hours. Chlorine and chlorine compounds can be extremely toxic to aquatic life. Massachusetts WQSs require the use of federal WQC where a specific pollutant could reasonably be expected to adversely affect existing or designated uses (314 C.M.R. 4.05 (5)(e)). The National Recommended freshwater acute and chronic WQC for total residual chlorine are 19 µg/L (0.019 mg/L), and 11 µg/L (0.011 mg/L), respectively. Since discharges from the facility receive no dilution under critical low flow conditions, EPA believes monitoring for TRC is necessary to ensure residual concentrations are not discharged to the Chelsea River.

Further, in Response to Comment B7, EPA has increased the effluent sampling requirements following treatment of hydrostatic test water and eliminated in-process testing requirements (also see Response to Comment R2). If the permittee utilizes municipal water supply for hydrostatic testing, the total number of samples required in the final permits for hydrostatic testing represents a net decrease relative to the total number of samples required for hydrostatic testing in the draft permits.

Comment L7:

Comment 6 – EPA should exempt treated surface or groundwater from the requirements of Section 1.B.

EPA should exempt treated surface or groundwater from the requirements of Section 1.B of the draft permits when, after a treatment with "activated carbon absorption" or similar method, the water meets the discharge limitations and criteria of the permits.

Response to Comment L7:

Part I.B. serves two critical purposes. The first purpose of Part I.B. is to define several allowable non-stormwater discharges that would be expected to be generated during normal operations at the facility. EPA has refined the heading for Part I.B. to reflect these "additional allowable discharges".

The second purpose of Part I.B. is to prohibit any discharges that are not otherwise permitted in Part I.A. Treated stormwater and groundwater are both permitted discharges under Part I.A. subject to the effluent limitations and monitoring requirements specified. Similarly, if additional groundwater remediation effluent other than that authorized in Part I.A. has not been requested, such a discharge is prohibited.

Comment L8:

Comment 7 – The final permits should acknowledge that naturally-occurring rainwater in New England exceeds EPA's proposed discharge limitations and allow for submittal of data should a discharge exceed the pH discharge limits.

While the discharge from the terminal has historically met the discharge limits for pH, Chelsea Sandwich is concerned about the more stringent discharge limits for pH in the draft permits. National Atmospheric Deposition Program ("NADP") data shows that rainwater in the New England region often has a pH below the proposed discharge limitation of 6.5-8.5 S.U. (see attached Exhibit A). Based on the NADP data, it appears that rainwater in New England contains pH levels below 6.0 S.U.

As the Chelsea Sandwich terminal is a petroleum storage and distribution facility, there are no processes that alter pH. It appears that some level of natural buffering occurs, resulting in pH in stormwater above 6.0 S.U., due to contact with soils and impermeable surfaces at the terminals. However, as this natural buffering is limited and outside the control of Chelsea Sandwich, EPA should acknowledge that the pH of rainwater in this area is acidic, and that this is a natural condition that impacts the stormwater discharge.

The draft permits should be modified to include that a discharge below 6.5 S.U. or evidence that the receiving waterbody's pH level fluctuated more than 0.2 S.U. during a storm event do not constitute a violation of the permits. Further, Chelsea Sandwich suggests that EPA allow for collection of rainwater for analysis and submittal to EPA where pH ranges in the discharge may be more acidic than allowed.

Response to Comment L8:

EPA acknowledges that rainwater in New England is often acidic and may affect the pH of stormwater discharges from industrial facilities. The requirement at Part I.A.4. of the permit states that "The pH of the effluent shall be neither less than 6.5 SU nor greater than 8.5 SU at any time, unless these values are exceeded due to natural causes". This requirement is based on the Massachusetts' WQSs (see 314 C.M.R. 4.05(4)(b)(3)) and takes into account that changes in pH might not be attributed to an on-site operation. This requirement shall be retained in the final permits.

EPA agrees that the pH of the discharge at Chelsea Sandwich can be attributed to the low pH of rainfall. EPA may take the effects of acidic rainfall into account when evaluating compliance with the permit's pH requirements. However, for discharge samples whose pH falls below 6.5 SU, EPA suggests that the facility collect rainwater samples from the same storm event and record the pH. This will provide data documenting the low pH of the stormwater as a possible source of the low pH of the discharge. However, no modification to the permit limitations for pH have been made, as the pH limitations apply to all Class SB waterbodies, including Chelsea River. A provision for this allowance has been added to the above footnote in the final permit.

Comments submitted which pertain to Global REVCO Terminal (#MA0003298):

Comments submitted by Michael A. Leon, Nutter, McClennen & Fish, LLP, on behalf of Global REVCO Terminal, LLC:

Comment M1:

Global appreciates the enormous effort that EPA devoted to preparing the draft permit, and finds that much of the content is reasonable and appropriate. Global believes, however, that certain provisions are inapt particularly in considering presently available information regarding the terminal.

In the balance of this letter, Global identifies the modifications it believes appropriate, and explains the bases for each.

Response to Comment M1:

EPA notes the comment.

Comment M2:

Comment 1 – The new proposed discharge limits for Outfall 005 should be suspended pending an evaluation of the flow direction in the area of the discharge.

The proposed discharge limits from Outfall 005, which constitute a significant change from the 2005 permit, should be suspended pending further study to determine the actual flow of the receiving waterbody segment and whether the discharge impacts Sales Creek.
While the draft permit for the Global REVCO terminal indicates that Outfall 005 discharges to Sales Creek, the discharge is actually to a small swale adjacent to the terminal. Available data from the City of Revere (attached at Exhibit A[62]) indicates that the water in the swale flows away from Sales Creek into man-made retention basins associated with the adjacent commercial development.

[62] The figure is developed from GIS data collected for the City of Revere by CDM Smith, the City's consulting engineer.

There are two potential flow patterns for discharged stormwater from Outfall 005. It may flow to the west and north towards Sales Creek, then east around the adjacent new shopping mall development. Alternatively, the flow may be to the east along the swale to a series of retention basins that appear to have been constructed to retain stormwater runoff from the new shopping mall. As shown on Exhibit A, the flow direction where the swale meets Sales Creek appears to be away from Sales Creek, towards the terminal and the discharge point. In addition, flow at the southeasterly terminus of the swale also shows the flow away from Sales Creek.
In order to determine the actual flow direction of the discharge, Global suggests that the discharge limits for Outfall 005 be suspended for one year while Global undertakes a study to determine the actual flow direction in the swale. This will enable Global to determine if the flow goes to the adjacent retention basins, where it is infiltrated, or if some amount of the discharge flows northerly along the swale to Sales Creek. Until flow direction is known, EPA is unable to provide legally tenable discharge limitations based upon impacts to the receiving waterbody.
In addition, the more stringent proposed discharge limits are a result of Sales Creek's present designation as a Class SA/ORW waterbody because it is a tributary to Belle Isle Inlet. However, EPA acknowledges in the fact sheet that MassDEP will likely reclassify Sales Creek in the future. EPA quotes MassDEP by stating that "although Sales Creek is currently classified in the SWQS as a Class SA/ORW since it is a tributary to Belle Isle Inlet, [Sales Creek] is separated from Belle Isle Inlet by a tide gate and does not function as a tidal system. It is recommended that this waterbody be reclassified in the next revision of the SWQS as a Class B/ORW waterbody." Because MassDEP has indicated that Sales Creek will be classified as a Class B waterbody, the discharge limitations should remain the same as in the 2005 permit.

Response to Comment M2:

The Permittee may undertake the hydrologic study described above if the Permittee believes the information provided to EPA in its permit application and the basis for the existing permit is no longer accurate. However, the Clean Water Act prohibits the discharge of pollutants into waters of the United States without an NPDES permit. Clean Water Act §402; 33 U.S.C. §1342. EPA develops appropriate permit conditions based on information available at the time of permit issuance.

Regarding the classification of Sales Creek, 40 C.F.R. §131 establishes the requirements for states and tribes to review, revise, and adopt water quality standards. It also establishes the procedures for EPA to review, approve, disapprove, and promulgate water quality standards pursuant to section 303(c) of the Clean Water Act. Water quality standards consist of: 1) designated uses; 2) water quality criteria; 3) an anti-degradation policy; and 4) general policies. Sales Creek itself is a small waterbody, including unnamed hydrologic tributaries, that flows to Belle Isle Inlet and into Winthrop Bay (Segment MA71-12) defined in 314 C.M.R. 4.06 as "*Belle Isle inlet and tributaries thereto*". It is classified as a SA/ORW waterbody, including Shellfishing, and consists of 0.008 square miles between its headwaters near Route 145, Revere, to a tide gate at the confluence with Belle Isle Inlet, in East Boston/Revere. The outfall location, as noted, is adjacent to one of several hydrologic features in the vicinity of Route 145. As such, information provided to date does not demonstrate that this discharge is not to Sales Creek.

Class SA waters are described in the Commonwealth of Massachusetts' WQSs (314 C.M.R. 4.05(4)(a)) as follows: "*These waters are designated as an excellent habitat for fish, other aquatic life and wildlife, including for their reproduction, migration, growth and other critical functions, and for primary and secondary contact recreation. In certain waters, excellent habitat for fish, other aquatic life and wildlife may include, but is not limited to, seagrass. Where designated in the tables to 314 C.M.R. 4.00 for shellfishing, these waters shall be suitable for shellfish harvesting without depuration (Approved and Conditionally Approved Shellfish Areas). These waters shall have excellent aesthetic value.*" Sales Creek is listed as Category 3 "No Uses Assessed" on the Final Massachusetts Year 2012 Integrated List of Waters. MassDEP noted in an errata sheet to the most recent WQR for the Mystic River Watershed (2010)[63] that "*although Sales Creek is currently classified in the SWQS as a Class SA/ORW since it is a tributary to Belle Isle Inlet, it is separated from Belle Isle Inlet by a tide gate and does not function as a tidal system. It is recommended that this waterbody be reclassified in the next revision of the SWQS as a Class B/ORW."* This correction does not state that MassDEP "will likely reclassify Sales Creek", as the commenter states. Until the State formally reclassifies Sales Creek to a Class B/ORW waterbody, the Draft Permit must contain limitations to meet water quality standards applicable to Class SA/ORW. As a result, EPA is unable to maintain the 2005 permit limitations as requested.

Comment M3:

Comment 2 – WET testing of the Outfall 005 discharge should be suspended.

For the pollutant scan and WET test, the draft permit requires that the receiving water sample be collected from Sales Creek at a point immediately outside of Outfall 005's zone of influence. However, as discussed in Comment 1, Outfall 005 does not discharge directly to Sales Creek, and it is unclear what the zone of influence would encompass. This sampling should be suspended until completion of the proposed hydrological study discussed in Comment 1 is completed. At that time, it will be clear whether discharge from Outfall 005 impacts Sales Creek and what type of sampling and discharge limits are necessary.

In addition, Global notes that the flow into the swale is intermittent. As such, if Sales Creek is determined to be the receiving waterbody, EPA should recognize that WET testing of a tributary to Sales Creek can only occur when there is water present. EPA should amend the draft permit to include that WET testing is not required when the receiving waterbody is dry.

Response to Comment M3:

See Response to Comment M2 regarding EPA's ability to stay permit requirements in this instance.

With regard to the intermittent nature of the receiving water, EPA agrees that sampling the receiving water as required is not feasible during dry periods. EPA has added a provision to the

[63] Errata Sheet: Mystic River 2004-2008 Water Quality Assessment Report available at http://www.mass.gov/eea/agencies/massdep/water/watersheds/mystic-river-2004-2008-water-quality-assessment-report.html.

final permit regarding sampling limitations for the receiving water. Standard provisions for use of an alternate dilution water also remain. A No Data Indicator Code should be used when a permittee is unable to sample because of receiving water conditions and such a code applies (e.g., F – Insufficient Flow for Sampling and 5 – Frozen Conditions).

Comment M4:

Comment 3 – The proposed discharge limits and sample parameters must be related to the discharge reasonably expected from a facility.

EPA must have a rational basis for determining a facility's discharge limits and sampling parameters. EPA improperly relies upon Section 308 of the Clean Water Act to provide authority to require reporting of information necessary to establish appropriate discharge limits. EPA, through reporting requirements, seeks to determine if discharge limitations are necessary in the future. However, the basis for establishing reporting requirements should be to limit and treat the constituents known to exist in the groundwater, soil and other surficial areas at a facility or the discharge from that facility that may impact the receiving waterbody. The sampling parameters and frequency should not encompass potential substances that have no connection to the discharge, have not been detected at a facility, are not in use at or in processes at a facility, or which are not under the control of a permitted operator. The following changes should be made to the final permits.

A. Monitoring for chromium, iron, cyanide, phenol, ammonia and fecal coliform should be deleted.
   - Chromium, cyanide and phenols are generally emitted by coating or plating processes. Global is unaware of any historic process at the terminal that used these constituents, or of any sample data that suggests these constituents are present in the stormwater discharge from the terminal. As these substances are not actually present at the terminal and are not used or stored at the terminal, there is no basis to require testing for them.
   - Global is unaware of any past process activities that released iron at the terminal. As noted by EPA in the facts sheets, iron occurs naturally in the soils in the area. As there is no evidence that iron impacts the stormwater discharge above expected background levels, there is no basis to require testing for iron.
   - Fecal coliform testing should not be required as there are no sanitary discharges to any of the outfalls at the terminal. While the Chelsea River is impaired for its designated uses, and fecal coliform is a pollutant requiring a TMDL, there is no evidence to suggest that the terminal is or has been a source.
   - Should EPA elect to not adopt Global's above approach, Global proposes in the alternative that the sampling for these constituents be conducted in the first year, but for each constituent that is not detected above background levels, nothing thereafter.
B. If, following the first required WET Test, it is shown that the discharge from the terminal has the same or greater survivability of the target species than that of the Receiving Water (Chelsea Creek), the proposed annual testing should be changed to require testing only every three years.

C. The frequency of any monthly sample parameter reported by the analyzing laboratory as not detected in a given discharge over a twelve (12) month sampling period should be automatically amended to require only quarterly sampling.

Response to Comment M4:

See Response to Comment L2, as the comment is substantially identical. EPA notes that monitoring for cyanide was not included in the draft permit for this facility as this pollutant was not identified as a pollutant of concern inasmuch as the facility has a different operational history from that of the Chelsea Sandwich Terminal and Sunoco Logistics Terminal. In addition, while verifying the parameters included in the pollutant scan based on review of the permittee's permit renewal application and in review of EPA's Remediation General Permit and/or EPA's *Technical Support Document for the 2004 Effluent Guidelines Program Plan,* EPA identified additional pollutants of concern under these categories. Also noted are pollutants required for this permit which are not described in Response to Comment L2.

Given the impairment in the Chelsea River for taste and odor, EPA considered metals known to cause an organoleptic effect (i.e., taste and odor), which are known or are potentially present at the facility, but are not currently monitored. Specifically, EPA notes that iron was detected at 1,380 µg/L at Outfall 001 and 1,300 µg/L at Outfall 005 as reported in the permittee's permit renewal application. Both of these measurements exceed the applicable *National Recommended Water Quality Criteria* organoleptic criterion for iron, 300 µg/L. Excessive amounts of iron may also cause or contribute to violations of WQSs including those related to color, turbidity, solids, Iron can also cause fouling of the discharge treatment systems (granular activated carbon). However, given the limited available data, the final permit includes monitoring requirements for total recoverable iron in conjunction with the Pollutant Scan for the effluent at Outfall 001 and 005, to determine the levels of iron in discharge. The final permit requires that total recoverable iron be analyzed and specifies an ML for analysis.

In addition, EPA noted that lead was detected at 31.2 µg/L at Outfall 005 as reported in the permittee's permit renewal application. This measurement exceeds the applicable *National Recommended Water Quality Criteria* saltwater chronic aquatic life criterion for lead, 8.1 µg/L. Similarly, monitoring, without limits are required to determine if concentrations of lead cause, or have the reasonable potential to cause, or contribute to an excursion above applicable criteria. However, as monitoring for lead is included in the monitoring requirements for Whole Effluent Toxicity testing, monitoring requirements have not been duplicated in the Pollutant Scan of the effluent.

EPA notes that tert-butyl alcohol ("TBA") was identified as a pollutant of concern for this facility following the process described in Response to Comment L2, but is not described in Response to Comment L2 since TBA was not identified as a pollutant of concern for the Chelsea Sandwich facility. TBA has been detected in surface water samples collected from the Chelsea River. As described in the permit's fact sheet, TBA is an oxygenate compound that has been added to petroleum fuels to enhance their performance. TBA can be present as both a fuel additive and as a breakdown product of MtBE in the environment. Monitoring for the compound

is required for sites with releases of petroleum products similar to those stored at the facility under EPA's Remediation General Permit.

With regard to chromium, the permittee reported in its permit renewal application a concentration of 2.1 µg/L at Outfall 005. With regard to ammonia, the permittee reported in its permit renewal application a concentration of 0.560 mg/L at Outfall 001 and 0.210 mg/L at Outfall 005. The supporting rationale for these pollutants of concern does not differ from the basis described in Response to Comment L2 and the permit's fact sheet.

Comment M5:

Comment 4 – The installation of totalizers or flow meters should not be required.

EPA should amend the draft permit to continue use of the current method of determining flow rate rather than requiring installation of flow meters at the outfall. Stormwater discharge metering is unnecessary as the terminal impounds all stormwater before pumping to an oil/water separator ("OWS") prior to discharge. EPA's intent in requiring metering, as discussed in the fact sheets, is to ensure that flow into the OWS does not exceed the design flow capacity of the OWS, thus rendering it ineffective. Because the rate of influent to the OWS is always controlled by pump rates, the throughput capacity cannot be exceeded.

Global currently determines flow to the terminal's OWS by recording the hours of operation of each discharge pump associated with the terminal's OWS. The total discharge flow rate is then calculated as the product of pump maximum discharge rate (capacity) and its operating time in hours. This method likely overestimates the total flow rate to the OWS, keeping the actual flow in compliance with permit discharge limits. It also ensures that the flow rate into the OWS does not exceed the design capacity. As the terminal flows have not exceeded the design capacity of the OWS at any facility, installation of the flow meters is not necessary.

At the Global REVCO terminal, Global has installed restrictions that further limit the flow into the OWS. This further prevents the possibility that the pump rate into the OWS will exceed the design capacity of the OWS.

In addition, Global notes that addition of a totalizer, which would measure the total output of a certain discharge over a period of time (for instance, a month), would not provide any safeguard against an exceedance of the design capacity of the OWS. In contrast to calculating the pump rate into the OWS and the restrictions on flow discussed above, a totalizer would just provide the total flow volume that was discharged.

Finally, Global has concerns that installing totalizers on the flow would be ineffective due to blockages, freezing or calibration issues. Such mechanical issues will not provide the required assurances that OWS design capacity has not been exceeded.

EPA should amend the draft permit and allow the flow rate to be calculated in the same manner as the 2005 permit. Global will continue to maintain records regarding flow rates, and will notify EPA of any modification to the impoundment system that would result in changes to the

discharge to the OWS. This method will continue to allow for proper operation of the OWS and keep flow into the OWS below design limitations.

Response to Comment M5:

See Response to Comment L3, as the comment is substantially identical. The permit requirement to use a flow meter was incorporated to allow for collection of actual volume information. This information is critical to evaluation of pollutant loading from the facility to the receiving water to ensure that the discharges do not cause or contribute to an excursion above water quality standards.

Comment M6:

Comment 5 – EPA should clarify the bases for reopening a permit.

The final permit should provide for notice and comment by the permit holder prior to EPA reopening a final permit. The draft permits each contain a reopener clause that allows modification to the permits at any time pursuant to 40 C.F.R. §122.62. Section 122.62 provides wide-ranging authority to reopen a permit for modification, including among other things substantial alteration to a facility, new information regarding operations, promulgation of new standards or regulations, judicial decision and detection of non-limited pollutants above levels that can be achieved by appropriate technology-based treatment methods. A modification can be either minor, which does not require a new draft permit or public comment period upon the consent of the permittee, or require the more burdensome issuance of a new draft permit if the modification does not qualify as minor under 40 C.F.R. §122.63. Section 122.62 also allows reopening in limited circumstances, such as noncompliance, for revocation or reissuance.

As Section 122.62 provides wide discretion for EPA to reopen the permits for a wide variety of reasons, the final permit should contain a provision that EPA will notify a permit holder prior to reopening a permit, allowing for discussion and comments on the rationale for reopening, the nature of proposed revisions and the potential to resolve a proposed revision as a minor modification, prior to a decision to issue a draft permit or open the matter to the public.

Response to Comment M6:

See Response to Comment L4, as the comment is substantially identical.

Comment M7:

Comment 6 – EPA should provide a concise definition of PQL.

EPA should define PQL as it is used in the draft permits. For example, during the April 17, 2014 informational meeting and public hearing on the draft permits, EPA stated the proposed benzo(a)pyrene compliance limit is the detection limit and not the number (0.018 µg/L) which is provided in the Effluent Limitation and Monitoring Requirements.

Global has concerns regarding certifying discharge monitoring reports as being compliant when the required laboratory analyses cannot meet the Effluent Limitation. The reporting of an amount above the actual discharge limitation, but below the laboratory's detection limit, will result in confusion, potential issues with NetDMR and the potential for a discharge to be found out of compliance.

As the proposed Limitation and Monitoring Requirement is in some instances below the detection limit, EPA should adopt the present laboratory detection limits as the effluent limits. EPA can then amend the discharge limit as sample technology improves, thus lowering the detection limits.

Response to Comment M7:

See Response to Comment L5, as the comment is substantially identical.

Comment M8:

Comment 7 – EPA should relieve permit holders from accounting for background chemicals in pretreated City water.

Global uses water directly from the City of Revere for hydrostatic testing at the terminal. Because this water is pretreated to state drinking water standards, Global requests that the final permits relieve Global from any requirements to account for background chemical concentrations detected in the incoming water.

Response to Comment M8:

See Response to Comment L6, as the comment is substantially identical.

Comment M9:

Comment 8 – EPA should exempt treated surface or groundwater from the requirements of Section 1.B.

EPA should exempt treated surface or groundwater from the requirements of Section 1.B of the draft permits when, after a treatment with "activated carbon absorption" or similar method, the water meets the proposed discharge limitations and criteria of the permits.

Response to Comment M9:

See Response to Comment L7, as the comment is substantially identical.

Comment M10:

Comment 9 – The final permits should acknowledge that naturally-occurring rainwater in New England exceeds EPA's proposed discharge limitations and allow for submittal of data should a discharge exceed the pH discharge limits.

While the discharge from the terminal has historically met the discharge limits for pH, Global is concerned about the more stringent discharge limits for pH in the draft permits. National Atmospheric Deposition Program ("NADP") data shows that rainwater in the New England region often has a pH below the proposed discharge limitation of 6.5-8.5 S.U. (see attached Exhibit B). Based on the NADP data, it appears that rainwater in New England contains pH levels below 6.0 S.U.

As the Global terminal is a petroleum storage and distribution facility, there are no processes that alter pH. It appears that some level of natural buffering occurs, resulting in pH in stormwater above 6.0 S.U., due to contact with soils and impermeable surfaces at the terminal. However, as this natural buffering is limited and outside the control of Global, EPA should acknowledge that the pH of rainwater in this area is acidic, and that this is a natural condition that impacts the stormwater discharge.

The draft permit should be modified to include that a discharge below 6.5 S.U. or evidence that the receiving waterbody's pH level fluctuated more than 0.2 S.U. during a storm event do not constitute a violation of the permits. Further, Global suggests that EPA allow for collection of rainwater for analysis and submittal to EPA where pH ranges in the discharge may be more acidic than allowed.

Response to Comment M10:

See Response to Comment L8, as the comment is substantially identical.

Comment M11:

Comment 10 – EPA should clarify that Global modified its permit renewal application. Global submitted a modification to the NPDES permit renewal application to the EPA on December 18, 2010.

It does not appear that the modification was addressed in the draft permit, as the draft permit fails to refer to the modification documents. The modification to the outfall is described in VI. Location and References for sampling points and flows, and includes the outfall reconfiguration as exhibited in the line diagram attached to the EPA Form C. EPA should clarify the draft permit to recognize and approve the modification.

Response to Comment M11:

EPA apologizes for the lack of clarity regarding its decision with respect to the permittee's modification of its permit renewal application. Requests were received by EPA detailing proposed changes to the facility dated August 14, 2010, September 21, 2010, and December 18, 2010. EPA also requested further clarification from the permittee regarding the specific changes

in the discharge to Outfall 001 and the configuration of infrastructure, which the permittee responded to on July 28, 2014.

As each request noted above varies slightly, in response to this comment, EPA has thoroughly reviewed the "Supplement to the Permit Renewal Application MA0003298 – 12/15/10" dated December 18, 2010 as specifically requested by the comment in reconsideration of the permittee's proposed changes. In this supplement and as clarified in subsequent correspondence, the permittee requests approval to separate the two sources of stormwater which currently discharge through Outfall 001 to alleviate flooding that occurs in the vicinity of the outfall. One stormwater flow consists of stormwater from the pipeline corridor. The other consists of stormwater from a portion of the former terminal yard currently leased to a commercial entity, comprised primarily of a warehouse and paved parking area. The former will continue to be treated through the existing oil/water separator and discharged through Outfall 001 to the Chelsea River. The permittee has proposed that the latter be established as a separate and independent flow through a second outfall that will not receive treatment through the oil/water separator but will continue to be discharged through Outfall 001 to the Chelsea River.

EPA agrees to allow the permittee to separate these flows given the persistent problems with flooding in this portion of the facility. However, based on the information provided to EPA in the December 18, 2010 supplement and analytical data provided in duplicate on July 28, 2014, EPA cannot exclude the separate outfall consisting of stormwater from the leased portion of the former terminal yard from NPDES coverage, as explained below. Section 402(p) of the Clean Water Act authorizes EPA to require a NPDES permit for stormwater discharges with respect to which an NPDES permit has been issued before February 4, 1987. The NPDES permit for this facility as issued to Union Petroleum Corporation effective May 26, 1978, authorized discharges from this area via Outfall 001. Section 402(p) also authorizes EPA to require a NPDES permit for stormwater discharges associated with industrial activity. Even if the former terminal yard is "located on plant lands separate from the plant's industrial activities," the configuration proposed by the permittee includes mixing stormwater runoff from this area with stormwater from an area associated with industrial activity (i.e., the pipeline corridor), thereby bringing such a discharge back under the regulatory definition of stormwater discharge associated with industrial activity. 40 C.F.R. §122.26(b)(14).

Therefore, EPA allows the proposed internal outfall for stormwater from the leased portion of the former terminal yard. As this effluent comingles with stormwater treated through the oil/water separator prior to discharge via Outfall 001, this stormwater is subject to the effluent limitations and requirements for Outfall 001. Based on EPA's review, this outfall cannot be exempted from the effluent limitations and monitoring requirements for Outfall 001 as requested, as the effluent will still be discharged to the Chelsea River via Outfall 001 and the characteristics of this stormwater discharge per available data indicate that such a discharge contributes the following pollutants:

- pH measured at 5.7 standard units is outside of the range allowed under Massachusetts' WQSs for Class SB waterbodies, 6.5 to 8.5 standard units.
- Benzo(a)pyrene detected at 0.315 µg/L exceeds applicable National Recommended Water Quality Criterion of 0.018 µg/L for human health, organism only. This criterion is

used for comparison because the Chelsea River is designated as a Class SB waterbody that MassDEP has determined should support fishing. Because the Chelsea River is impaired for petroleum hydrocarbons, a pollutant class that includes this compound, discharge of this pollutant causes or has reasonable potential to cause or contribute to an excursion above water quality criteria and must be limited.

- Indeno(1,2,3-c,d)pyrene detected at 0.845 µg/L exceeds applicable National Recommended Water Quality Criterion of 0.018 µg/L for human health, organism only. This criterion is used for comparison because the Chelsea River is designated as a Class SB waterbody that MassDEP has determined should support fishing. Because the Chelsea River is impaired for petroleum hydrocarbons, a pollutant class that includes this compound, discharge of this pollutant causes or has reasonable potential to cause or contribute to an excursion above water quality criteria and must be limited. This compound is limited at Outfall 001 via the indicator parameter for Group I Polycyclic Aromatic Hydrocarbons, benzo(a)pyrene.

Based on this single sample, EPA cannot otherwise determine if permitting this discharge without limitation ensures compliance with water quality standards. The sampling location for Outfall 001 as specified in the draft permit as the discharge point to the Chelsea River, remains unchanged. With regard to EPA's authority for the inclusion of monitoring requirements, see Response to Comment L2. EPA notes that this determination does not increase the sampling requirements for the permittee and no flow rate limit has been included for the stormwater from the leased portion of the former terminal yard.

Comment M12:

Comment 11 – The discharge limit for MTBE at Outfall 005 should remain unchanged from the 2005 permit.

The approach used by EPA to determine the MTBE discharge limit at Outfall 005 does not justify the restrictive limit imposed in the draft permit. MTBE is not a listed priority pollutant and the limit expressed in the draft permits is based on an advisory guidance of 20 to 40 µg/L. In addition, the method used by EPA to determine if the discharge of MTBE would have a reasonable potential to cause or contribute to an excursion above WQC is based on a recommended method of percentile measurements. In the absence of any data indicating that MTBE is the cause of any current impaired status of Sales Creek, no MTBE limit is justifiable. The MTBE discharge limit should remain unchanged from the 2005 permit and be set at 70 µg/L.

Response to Comment M12:

While the state has not identified MtBE as a pollutant causing impairment to a designated use in the receiving water, EPA applies a standard of reasonableness to past effluent monitoring data and the pollutants typical of petroleum products, which include additives and oxygenates. While MtBE is no longer used at the facility, it persists in the effluent and/or groundwater at this and/or the six additional terminals along the Chelsea River. As a result, and in consideration of Massachusetts' WQSs applicable to Sales Creek, EPA deemed MtBE a pollutant of concern.

Massachusetts' Surface Water Quality Standards for Class SA waters include a narrative criterion for taste and odor that states, "[n]one other than natural origin". 314 C.M.R. §4.05(4)(a). Massachusetts' Surface Water Quality Standards also contain additional minimum criteria applicable to all surface waters, including Class SA applicable to Sales Creek and Class SB applicable to Chelsea River that state, "[a]ll surface waters shall be free from pollutants in concentrations or combinations that are toxic to humans, aquatic life or wildlife". 314 C.M.R. §4.05(5)(e)

Under 33 U.S.C. §1251, in addition to basing numeric criteria on EPA's section 304(a) criteria documents, States may also base numeric criteria on site-specific determinations or other scientifically defensible methods through the state's water quality standards or an implementation policy or procedure. The commenter is correct that MtBE is not a priority pollutant. However, it is a non-conventional pollutant under 33 U.S.C. §1314(a)(4), is a toxic substance catalogued by the U.S. Department of Health and Human Services,[64] and has been evaluated by EPA under the Safe Drinking Water Act.[65] Criteria requirements applicable to toxicants that are not priority toxic pollutants (e.g., ammonia and chlorine), are specified in the Water Quality Standards Regulation (see 40 C.F.R. §131.11). Under these requirements, States must adopt criteria based on sound scientific rationale that cover sufficient parameters to protect designated uses. Both numeric and narrative criteria may be applied to meet these requirements. EPA considers that the narrative criteria apply to all designated uses and are necessary to meet the statutory requirements of section 303(c)(2)(A) of the Clean Water Act .[66]

Massachusetts' *Implementation Policy for the Control of Toxic Pollutants in Surface Waters*, February 23, 1990, outlines MassDEP's policy in implementing the narrative criteria applicable to toxics, including, *but not limited to*, priority pollutants under Section 307(a) of the Clean Water Act and interpreted for regulatory purposes in EPA's "Gold Book".[67] The stated goals are to: 1) protect public health, encompassing uses as public drinking water supply, primary contact recreation and secondary contact recreation, further subdivided into four major exposure routes - drinking water ingestion, dermal contact, inhalation; and fish ingestion; 2) protect aquatic life and wildlife, both short-term (acute) and long-term (chronic); and 3) prevent the accumulation of toxic pollutants, in sediment and/or biota, including the edibility of fish and shellfish. The narrative states that where a toxic pollutant is of concern, and no criterion is specified in the regulation, then a recommended limit, defined as a proposed criterion from an authoritative source such as EPA's "Gold Book", drinking water regulations, and U.S. Food and Drug Administration's Action Levels for fish and shellfish. The policy further states that recommended limits function exactly like criteria except that they are listed and documented by these other authoritative sources and are thusly incorporated by reference. Since Massachusetts has not promulgated a numeric criterion for the applicable narrative criteria with regard to MtBE, EPA followed the requirements of 40 C.F.R. §122.44 (e.g., 40 C.F.R. §122.44(d)(1)(vi)), and 40

---

[64] *Toxicological Profile for Methyl tert-Butyl Ether (MTBE)*, Agency for Toxic Substances and Disease Registry (ATSDR); 1996.

[65] *Drinking Water Advisory: Consumer Acceptability Advice and Health Effects Analysis on Methyl Tertiary-Butyl Ether (MtBE)*; EPA-822-F-97-009: December, 1997.

[66] See *Water Quality Standards Handbook: Second Edition* for information and additional references; EPA-823-B-12-002: March 2012.

[67] See Quality Criteria for Water 1986, EPA 440/5-86-001.

C.F.R. §131, namely 40 C.F.R. §131.11(a)(2), via Massachusetts' *Implementation Policy for the Control of Toxic Pollutants in Surface Waters*, in determining an appropriate recommended limit.

Massachusetts' WQSs further contain criteria specific to the aesthetics designated use, namely that, "All surface waters shall be free from pollutants in concentrations or combinations that settle to form objectionable deposits; float as debris, scum or other matter to form nuisances; produce objectionable odor, color, taste or turbidity; or produce undesirable or nuisance species of aquatic life." 314 C.M.R. §4.05(5)(a). Based on the applicable narrative criteria, and the documented threshold value for taste and odor effects as a lifetime health advisory for MtBE in connection with the Safe Drinking Water Act, the criterion selected was 40 µg/L for taste effects and 20 µg/l for odor effects. The use of the advisory threshold value for MtBE is an interpretation of the narrative standard at 314 C.M.R. §4.05(5)(e) and further satisfies 314 C.M.R. §4.05(4)(a) and 314 C.M.R. §4.05(5)(a), based on sound scientific rationale and pollutant-specific documentation noted above. Thus, the criterion to which EPA compared projected effluent concentrations in determining reasonable potential to cause or contribute to an excursion above water quality standards is appropriate.

Further, EPA disagrees that an MtBE limit is only justifiable where the data indicates that MtBE is the *cause* of an excursion above water quality criteria applicable for Sales Creek. The applicable legal standard looks not only to whether discharges *cause*, but also whether those discharges have a *reasonable potential to cause* or *contribute to* a violation of water quality standards.[68] To determine if the concentrations discharged by the facility cause or have a reasonable potential to cause or contribute to an excursion above the Massachusetts' narrative WQC, EPA followed the guidance in *Technical Support Document for Water Quality-based Toxics Control*. While the commenter notes this methodology as "recommended", no acceptable alternative acceptable method for analysis is suggested. Based on the lognormal distribution of effluent data and the quantity of available data, the percentile approach prescribed in EPA's *Technical Support Document for Water Quality-based Toxics Control* to determine reasonable potential is appropriate. As the reasonable potential analysis included in the permit's fact sheet demonstrated, the discharge has reasonable potential to cause an excursion above the odor threshold value for MtBE.

Finally, the limitation the commenter has requested to maintain is a TBEL. Where a WQBEL is more stringent than a TBEL, EPA must include the more stringent WQBEL in the NPDES permit. Therefore, EPA retains the WQBEL in the final permit, 20 µg/L for MtBE.

<u>Comments submitted which pertain to Global Petroleum Terminal (#MA0003425):</u>

Comments submitted by Michael A. Leon, Nutter, McClennen & Fish, LLP, on behalf of Global Petroleum Corporation:

Comment N1:

[68] <u>In re Upper Blackstone Water Pollution Abatement Dist.</u>, 14 E.A.D. 577, 599 (EAB May 28, 2010).

Global appreciates the enormous effort that EPA devoted to preparing the draft permit, and finds that much of the content is reasonable and appropriate. Global believes, however, that certain provisions are inapt particularly in considering presently available information regarding the terminal.

In the balance of this letter, Global identifies the modifications it believes appropriate, and explains the bases for each.

Response to Comment N1:

EPA notes the comment.

Comment N2:

Comment 1 – The proposed discharge limits and sample parameters must be related to the discharge reasonably expected from a facility.

EPA must have a rational basis for determining a facility's discharge limits and sampling parameters. EPA improperly relies upon Section 308 of the Clean Water Act to provide authority to require reporting of information necessary to establish appropriate discharge limits. EPA, through reporting requirements, seeks to determine if discharge limitations are necessary in the future. However, the basis for establishing reporting requirements should be to limit and treat the constituents known to exist in the groundwater, soil and other surficial areas at a facility or the discharge from that facility that may impact the receiving waterbody. The sampling parameters and frequency should not encompass potential substances that have no connection to the discharge, have not been detected at a facility, are not in use at or in processes at a facility, or which are not under the control of a permitted operator. The following changes should be made to the final permits.

A. Monitoring for chromium, iron, cyanide, phenol, ammonia and fecal coliform should be deleted.
    - Chromium, cyanide and phenols are generally emitted by coating or plating processes. Global is unaware of any historic process at the terminal that used these constituents, or of any sample data that suggests these constituents are present in the stormwater discharge from the terminal. As these substances are not actually present at the terminal and are not used or stored at the terminal, there is no basis to require testing for them.
    - Global is unaware of any past process activities that released iron at the terminal. As noted by EPA in the facts sheets, iron occurs naturally in the soils in the area. As there is no evidence that iron impacts the stormwater discharge above expected background levels, there is no basis to require testing for iron.
    - Fecal coliform testing should not be required as there are no sanitary discharges to any of the outfalls at the Global terminal. While the Chelsea River is impaired for its designated uses, and fecal coliform is a pollutant requiring a TMDL, there is no evidence to suggest that the terminal is or has been a source.

- Should EPA elect to not adopt Global's above approach, Global proposes in the alternative that the sampling for these constituents be conducted in the first year, but for each constituent that is not detected above background levels, nothing thereafter.

B. If, following the first required WET Test, it is shown that the discharge from the terminal has the same or greater survivability of the target species than that of the Receiving Water (Chelsea Creek), the proposed annual testing should be changed to require testing only every three years.

C. The frequency of any monthly sample parameter reported by the analyzing laboratory as not detected in a given discharge over a twelve (12) month sampling period should be automatically amended to require only quarterly sampling.

Response to Comment N2:

See Response to Comment L2, as the comment is substantially identical. EPA notes that monitoring for cyanide were not included in the draft permit for this facility as this pollutant was not identified as a pollutant of concern inasmuch as the facility has a different operational history from that of the Chelsea Sandwich Terminal and the Sunoco Logistics Terminal. With regard to iron, the permittee reported in its permit renewal application a concentration of 128 µg/L at Outfall 001 and 216 µg/L at Outfall 002. With regard to ammonia, the permittee reported in its permit renewal application a concentration of 3.36 mg/L at Outfall 001 and 0.840 mg/L at Outfall 002. The supporting rationale for these pollutants of concern does not differ from the basis described in Response to Comment L2 and the permits' fact sheets.

EPA also notes that tert-butyl alcohol (TBA) was identified as a pollutant of concern for this facility which is not described in Response to Comment L2. With regard to TBA, see Response to Comment M4.

Comment N3:

Comment 2 – The installation of flow meters should not be required.

EPA should amend the draft permit to continue use of the current method of determining flow rate rather than requiring installation of flow meters at the outfall. Stormwater discharge metering is unnecessary as the terminal impounds all stormwater before pumping to an oil/water separator ("OWS") prior to discharge. EPA's intent in requiring metering, as discussed in the fact sheets, is to ensure that flow into the OWS does not exceed the design flow capacity of the OWS, thus rendering it ineffective. Because the rate of influent to the OWS is always controlled by pump rates, the throughput capacity cannot be exceeded.

Global currently determines flow to the terminal's OWS by recording the hours of operation of each discharge pump associated with the terminal's OWS. The total discharge flow rate is then calculated as the product of pump maximum discharge rate (capacity) and its operating time in hours. This method likely overestimates the total flow rate to the OWS, keeping the actual flow

in compliance with permit discharge limits. It also ensures that the flow rate into the OWS does not exceed the design capacity. As the terminal flows have not exceeded the design capacity of the OWS at any facility, installation of the flow meters is not necessary.

At the Global terminal, Global has installed restrictions that further limit the flow into the OWS. This further prevents the possibility that the pump rate into the OWS will exceed the design capacity of the OWS.

In addition, Global notes that addition of a totalizer, which would measure the total output of a certain discharge over a period of time (for instance, a month), would not provide any safeguard against an exceedance of the design capacity of the OWS. In contrast to calculating the pump rate into the OWS and the restrictions on flow discussed above, a totalizer would just provide the total flow volume that was discharged.

Finally, Global has concerns that installing totalizers on the flow would be ineffective due to blockages, freezing or calibration issues. Such mechanical issues will not provide the required assurances that OWS design capacity has not been exceeded.

EPA should amend the draft permit and allow the flow rate to be calculated in the same manner as the 2005 permit. Global will continue to maintain records regarding flow rates, and will notify EPA of any modification to the impoundment system that would result in changes to the discharge to the OWS. This method will continue to allow for proper operation of the OWS and keep flow into the OWS below design limitations.

Response to Comment N3:

See Response to Comment L3, as the comment is substantially identical. The permit requirement to use a flow meter was incorporated to allow for collection of actual volume information. This information is critical to evaluation of pollutant loading from the facility to the receiving water to ensure that the discharges do not cause or contribute to an excursion above water quality standards.

Comment N4:

Comment 3 – EPA should clarify the bases for reopening a permit.

The final permit should provide for notice and comment by the permit holder prior to EPA reopening a final permit. The draft permits each contain a reopener clause that allows modification to the permits at any time pursuant to 40 C.F.R. §122.62. Section 122.62 provides wide-ranging authority to reopen a permit for modification, including among other things substantial alteration to a facility, new information regarding operations, promulgation of new standards or regulations, judicial decision and detection of non-limited pollutants above levels that can be achieved by appropriate technology-based treatment methods. A modification can be either minor, which does not require a new draft permit or public comment period upon the consent of the permittee, or require the more burdensome issuance of a new draft permit if the

modification does not qualify as minor under 40 C.F.R. §122.63. Section 122.62 also allows reopening in limited circumstances, such as noncompliance, for revocation or reissuance.

As Section 122.62 provides wide discretion for EPA to reopen the permits for a wide variety of reasons, the final permit should contain a provision that EPA will notify a permit holder prior to reopening a permit, allowing for discussion and comments on the rationale for reopening, the nature of proposed revisions and the potential to resolve a proposed revision as a minor modification, prior to a decision to issue a draft permit or open the matter to the public.

Response to Comment N4:

See Response to Comment L4, as the comment is substantially identical.

Comment N5:

Comment 4 – EPA should provide a concise definition of PQL.

EPA should define PQL as it is used in the draft permits. For example, during the April 17, 2014 informational meeting and public hearing on the draft permits, EPA stated the proposed benzo(a)pyrene compliance limit is the detection limit and not the number (0.018 µg/L) which is provided in the Effluent Limitation and Monitoring Requirements.

Global has concerns regarding certifying discharge monitoring reports as being compliant when the required laboratory analyses cannot meet the Effluent Limitation. The reporting of an amount above the actual discharge limitation, but below the laboratory's detection limit, will result in confusion, potential issues with NetDMR and the potential for a discharge to be found out of compliance.

As the proposed Limitation and Monitoring Requirement is in some instances below the detection limit, EPA should adopt the present method detection limits as the effluent limits. EPA can then amend the discharge limit as sample technology improves, thus lowering the detection limits.

Response to Comment N5:

See Response to Comment L5, as the comment is substantially identical.

Comment N6:

Comment 5 – EPA should relieve permit holders from accounting for background chemicals in pretreated City water.

Global uses water directly from the City of Revere for hydrostatic testing at the terminal. Because this water is pretreated to state drinking water standards, Global requests that the final permits relieve Global from any requirements to account for background chemical concentrations detected in the incoming water.

Response to Comment N6:

See Response to Comment L6, as the comment is substantially identical.

Comment N7:

Comment 6 – EPA should exempt treated surface or groundwater from the requirements of Section 1.B.

EPA should exempt treated surface or groundwater from the requirements of Section 1.B of the draft permits when, after a treatment with "activated carbon absorption" or similar method, the water meets the discharge limitations and criteria of the permits.

Response to Comment N7:

See Response to Comment L7, as the comment is substantially identical.

Comment N8:

Comment 7 – The final permits should acknowledge that naturally-occurring rainwater in New England exceeds EPA's proposed discharge limitations and allow for submittal of data should a discharge exceed the pH discharge limits.

While the discharge from the terminal has historically met the discharge limits for pH, Global is concerned about the more stringent discharge limits for pH in the draft permits. National Atmospheric Deposition Program ("NADP") data shows that rainwater in the New England region often has a pH below the proposed discharge limitation of 6.5-8.5 S.U. (see attached Exhibit A). Based on the NADP data, it appears that rainwater in New England contains pH levels below 6.0 S.U.

As the Global terminal is a petroleum storage and distribution facility, there are no processes that alter pH. It appears that some level of natural buffering occurs, resulting in pH in stormwater above 6.0 S.U., due to contact with soils and impermeable surfaces at the terminals. However, as this natural buffering is limited and outside the control of Global, EPA should acknowledge that the pH of rainwater in this area is acidic, and that this is a natural condition that impacts the stormwater discharge.

The draft permit should be modified to include that a discharge below 6.5 S.U. or evidence that the receiving waterbody's pH level fluctuated more than 0.2 S.U. during a storm event do not constitute a violation of the permits. Further, Global suggests that EPA allow for collection of rainwater for analysis and submittal to EPA where pH ranges in the discharge may be more acidic than allowed.

Response to Comment N8:

See Response to Comment L8, as the comment is substantially identical.

Comment N9:

Comment 8 – The sampling location for Outfall 001 should be moved to a safer, more accessible location.

The draft permit includes the new requirement for sampling at Outfall 001. As the existing Outfall 001 extends into the tidal waters, at times during the high tide, the outfall is submerged and the location is potentially unsafe for the sample collector. Thus, Global proposes an alternate, safer sampling location at the point adjacent to the discharge point from the OWS. Water samples obtained at this location will be representative of the discharge at Outfall 001 and will meet the location criteria for such sampling.

Response to Comment N9:

EPA agrees that the proposed sampling location will yield samples representative of the discharge from Outfall 001. However, the draft permit did not require that the permittee sample at the discharge point to the Chelsea River for Outfall 001. Rather, the draft permit required that "samples for Outfall 001 shall be collected after effluents from internal Outfalls 002 and 003 comingle in the concrete vault adjacent to the Terminal's primary oil/water separator (OWS), free from tidal influence." EPA believes this sampling location is consistent with the permittee's request. Therefore, there is no change in sampling location between the draft and final permits. EPA also notes that the permittee may change the sampling location during the permit term, if necessary, provided the change is approved in writing by EPA and MassDEP.

Comment N10:

Comment 9 – EPA should authorize treatment and discharge of contaminated commingled stormwater as well as groundwater.

Page 12 of the draft permit states that Global "is authorized to discharge treated groundwater through internal waste stream." This allows discharge of groundwater through the outfall following remedial treatment. Global requests that this be clarified and amended to also allow for treatment of contaminated commingled stormwater as well as groundwater resulting from infiltration and inflow of the groundwater into the stormwater collection system, when and if necessary.

Response to Comment N10:

EPA agrees to allow the discharge of groundwater and contaminated stormwater following treatment through the remediation system. EPA has changed the final permit to reflect this allowance. Application of additional treatment to contaminated stormwater is expected to improve the overall quality of effluent discharged from the facility. Any effluent discharged through Outfall 003 is subject to the effluent limitations and monitoring requirements of Part I.A.3. of the final permit.

Comment N11:

Comment 10 – The discharge limit for MTBE should remain unchanged from the 2005 permit.

The approach used by EPA to determine the MTBE discharge limit at Outfall 001 does not justify the restrictive limit imposed in the draft permit. MTBE is not a listed priority pollutant and the limit expressed in the draft permits is based on an advisory guidance of 20 to 40 µg/L. In addition, the method used by EPA to determine if the discharge of MTBE would have a reasonable potential to cause or contribute to an excursion above WQC is based on a recommended method of percentile measurements. In the absence of any data indicating that MTBE is the cause of any current impaired status of the Chelsea River, no MTBE limit is justifiable. The MTBE discharge limit should remain unchanged from the 2005 permit at 70 µg/L.

Response to Comment N11:

See Response to Comment M12, as the comment is substantially identical. With respect to the Chelsea River specifically, EPA further notes that this waterbody is impaired for the Aquatic Life, Aesthetics, Primary Contact and Secondary Contact Uses as a result of petroleum and the pollutants ”petroleum hydrocarbons” and “odor”, among others. MassDEP has not determined which individual compounds cause or contribute to the impairments. As a result, EPA considered the compounds that are more likely to be present in the effluent based on monitoring data for the Terminal and similar facilities, and information documented in Section 7 of EPA’s *Technical Support Document for the 2004 Effluent Guidelines Program Plan*[69] including petroleum bulk stations and terminals (Section 7.12), which have known organoleptic effects (i.e., taste and odor). Massachusetts’ Surface Water Quality Standards for Class SB waters include a narrative criterion for taste and odor that states, “[n]one in such concentrations or combinations that are aesthetically objectionable, that would impair any use assigned to this class, or that would cause tainting or undesirable flavors in the edible portions of aquatic life”. 314 C.M.R. §4.05(4)(b)8.

As described in the permit’s fact sheet, groundwater samples at the facility have indicated up to 10,000 µg/L of MtBE. From January 1, 2009 through December 31, 2013, concentrations ranged from below the PQL to 34.2 µg/L at Outfall 002 and from below the PQL to 81.4 µg/L at Outfall 003. As the reasonable potential analysis describes, effluent concentrations have reasonable potential to cause or contribute to an excursion above applicable water quality criteria. In addition, in February 2014, the facility reported an MtBE concentration of 2,170 µg/L at Outfall 002 and in April 2014, the facility reported an MtBE concentration of 81.4 µg/L at Outfall 003. These data indicate elevated levels of MtBE persist. For these and the additional reasons detailed in Response to Comment M12, EPA retains the WQBEL in the final permit, 20 µg/L for MtBE.

<u>Comments submitted which pertain to Global South Terminal (#MA0000825):</u>

[69] EPA Office of Science and Technology. *Technical Support Document for the 2004 Effluent Guidelines Program Plan* (EPA-821-R-04-014: August 2004, Section 7.12, P 72-127.

Comments submitted by Michael A. Leon, Nutter, McClennen & Fish, LLP, on behalf of Global South Terminal, LLC:

Comment O1:

Global appreciates the enormous effort that EPA devoted to preparing the draft permit, and finds that much of the content is reasonable and appropriate. Global believes, however, that certain provisions are inapt particularly in considering presently available information regarding the terminal.

In the balance of this letter, Global identifies the modifications it believes appropriate, and explains the bases for each.

Response to Comment O1:

EPA notes the comment.

Comment O2:

Comment 1 – The proposed discharge limits and sample parameters must be related to the discharge reasonably expected from a facility.

EPA must have a rational basis for determining a facility's discharge limits and sampling parameters. EPA improperly relies upon Section 308 of the Clean Water Act to provide authority to require reporting of information necessary to establish appropriate discharge limits. EPA, through reporting requirements, seeks to determine if discharge limitations are necessary in the future. However, the basis for establishing reporting requirements should be to limit and treat the constituents known to exist in the groundwater, soil and other surficial areas at a facility or the discharge from that facility that may impact the receiving waterbody. The sampling parameters and frequency should not encompass potential substances that have no connection to the discharge, have not been detected at a facility, are not in use at or in processes at a facility, or which are not under the control of a permitted operator. The following changes should be made to the final permits.

A. Monitoring for chromium, iron, cyanide, phenol, ammonia and fecal coliform should be deleted.
    - Chromium, cyanide and phenols are generally emitted by coating or plating processes. Global is unaware of any historic process at the terminal that used these constituents, or of any sample data that suggests these constituents are present in the stormwater discharge from the terminal. As these substances are not actually present at the terminal and are not used or stored at the terminal, there is no basis to require testing for them.
    - Global is unaware of any past process activities that released iron at the terminal. As noted by EPA in the facts sheets, iron occurs naturally in the soils in the area. As there is no evidence that iron impacts the stormwater discharge above expected background levels, there is no basis to require testing for iron.

- Fecal coliform testing should not be required as there are no sanitary discharges to the outfall at the Global terminal. While the Chelsea River is impaired for its designated uses, and fecal coliform is a pollutant requiring a TMDL, there is no evidence to suggest that the terminal is or has been a source.
- Should EPA elect to not adopt Global's above approach, Global proposes in the alternative that the sampling for these constituents be conducted in the first year, but for each constituent that is not detected above background levels, nothing thereafter.

B. If, following the first required WET Test, it is shown that the discharge from the terminal has the same or greater survivability of the target species than that of the Receiving Water (Chelsea Creek), the proposed annual testing should be changed to require testing only every three years.

C. The frequency of any monthly sample parameter reported by the analyzing laboratory as not detected in a given discharge over a twelve (12) month sampling period should be automatically amended to require only quarterly sampling.

Response to Comment O2:

See Response to Comment L2, as the comment is substantially identical. EPA notes that monitoring for cyanide was not included in the draft permit for this facility as this pollutant was not identified as a pollutant of concern inasmuch as the facility has a different operational history from that of the Chelsea Sandwich Terminal and Sunoco Logistics Terminal. In addition, while verifying the parameters included in the pollutant scan based on review of the permittee's permit renewal application, EPA identified the omission of certain monitoring requirements.

Specifically, EPA notes that iron was detected at 1,900 µg/L at Outfall 001, as reported in the permittee's permit renewal application. This concentration exceeds the applicable criteria described in Response to Comment M4. As also discussed in Response to Comment M4, where the available data for iron indicate concentrations may cause, or have reasonable potential to cause, or contribute to an excursion above applicable water quality criteria, but monitoring data is limited, monitoring, without limits is necessary to ensure discharges meet Massachusetts' water quality standards. However, EPA inadvertently omitted this requirement from the draft permit. Therefore, the final permit includes monitoring, without limits for total recoverable iron under the effluent pollutant scan. With regard to chromium, the permittee reported in its permit renewal application a concentration of 2.0 µg/L at Outfall 001. With regard to ammonia, the permittee reported in its permit renewal application a concentration of 0.630 mg/L at Outfall 001. The supporting rationale for these pollutants of concern does not differ from the basis described in Response to Comment L2 and the permits' fact sheets.

EPA also notes that tert-butyl alcohol ("TBA") was identified as a pollutant of concern for this permit which is not described in Response to Comment L2. With regard to TBA, see Response to Comment M4.

Comment O3:

Comment 2 – The installation of flow meters should not be required.

EPA should amend the draft permit to continue use of the current method of determining flow rate rather than requiring installation of flow meters at the outfall. Stormwater discharge metering is unnecessary as the terminal impounds all stormwater before pumping to an oil/water separator ("OWS") prior to discharge. EPA's intent in requiring metering, as discussed in the fact sheets, is to ensure that flow into the OWS does not exceed the design flow capacity of the OWS, thus rendering it ineffective. Because the rate of influent to the OWS is always controlled by pump rates, the throughput capacity cannot be exceeded.

Global currently determines flow to the terminal's OWS by recording the hours of operation of each discharge pump associated with the terminal's OWS. The total discharge flow rate is then calculated as the product of pump maximum discharge rate (capacity) and its operating time in hours. This method likely overestimates the total flow rate to the OWS, keeping the actual flow in compliance with permit discharge limits. It also ensures that the flow rate into the OWS does not exceed the design capacity. As the terminal flows have not exceeded the design capacity of the OWS at any facility, installation of the flow meters is not necessary.

In addition, Global notes that addition of a totalizer, which would measure the total output of a certain discharge over a period of time (for instance, a month), would not provide any safeguard against an exceedance of the design capacity of the OWS. In contrast to calculating the pump rate into the OWS, a totalizer would just provide the total flow volume that was discharged.

Finally, Global has concerns that installing totalizers on the flow would be ineffective due to blockages, freezing or calibration issues. Such mechanical issues will not provide the required assurances that OWS design capacity has not been exceeded.

EPA should amend the draft permit and allow the flow rate to be calculated in the same manner as the 2005 permit. Global will continue to maintain records regarding flow rates, and will notify EPA of any modification to the impoundment system that would result in changes to the discharge to the OWS. This method will continue to allow for proper operation of the OWS and keep flow into the OWS below design limitations.

Response to Comment O3:

See Response to Comment L3, as the comment is substantially identical. The permit requirement to use a flow meter was incorporated to allow for collection of actual volume information. This information is critical to evaluation of pollutant loading from the facility to the receiving water to ensure that the discharges do not cause or contribute to an excursion above water quality standards.

Comment O4:

Comment 3 – EPA should clarify the bases for reopening a permit.

The final permit should provide for notice and comment by the permit holder prior to EPA reopening a final permit. The draft permits each contain a reopener clause that allows modification to the permits at any time pursuant to 40 C.F.R. §122.62. Section 122.62 provides wide-ranging authority to reopen a permit for modification, including among other things substantial alteration to a facility, new information regarding operations, promulgation of new standards or regulations, judicial decision and detection of non-limited pollutants above levels that can be achieved by appropriate technology-based treatment methods. A modification can be either minor, which does not require a new draft permit or public comment period upon the consent of the permittee, or require the more burdensome issuance of a new draft permit if the modification does not qualify as minor under 40 C.F.R. §122.63. Section 122.62 also allows reopening in limited circumstances, such as noncompliance, for revocation or reissuance.

As Section 122.62 provides wide discretion for EPA to reopen the permits for a wide variety of reasons, the final permit should contain a provision that EPA will notify a permit holder prior to reopening a permit, allowing for discussion and comments on the rationale for reopening, the nature of proposed revisions and the potential to resolve a proposed revision as a minor modification, prior to a decision to issue a draft permit or open the matter to the public.

Response to Comment O4:

See Response to Comment L4, as the comment is substantially identical.

Comment O5:

Comment 4 – EPA should provide a concise definition of PQL.

EPA should define PQL as it is used in the draft permits. For example, during the April 17, 2014 informational meeting and public hearing on the draft permits, EPA stated the proposed benzo(a)pyrene compliance limit is the detection limit and not the number (0.018 µg/L) which is provided in the Effluent Limitation and Monitoring Requirements.

Global has concerns regarding certifying discharge monitoring reports as being compliant when the required laboratory analyses cannot meet the Effluent Limitation. The reporting of an amount above the actual discharge limitation, but below the laboratory's detection limit, will result in confusion, potential issues with NetDMR and the potential for a discharge to be found out of compliance.

As the proposed Limitation and Monitoring Requirement is in some instances below the detection limit, EPA should adopt the present laboratory detection limits as the effluent limits. EPA can then amend the discharge limit as sample technology improves, thus lowering the detection limits.

Response to Comment O5:

See Response to Comment L5, as the comment is substantially identical.

Comment O6:

Comment 5 – EPA should relieve permit holders from accounting for background chemicals in pretreated City water.

Global uses water directly from the City of Revere for hydrostatic testing at the terminal. Because this water is pretreated to state drinking water standards, Global requests that the final permits relieve Global from any requirements to account for background chemical concentrations detected in the incoming water.

Response to Comment O6:

See Response to Comment L6, as the comment is substantially identical.

Comment O7:

Comment 6 – EPA should exempt treated surface or groundwater from the requirements of Section 1.B.

EPA should exempt treated surface or groundwater from the requirements of Section 1.B of the draft permits when, after a treatment with "activated carbon absorption" or similar method, the water meets the discharge limitations and criteria of the permits.

Response to Comment O7:

See Response to Comment L7, as the comment is substantially identical.

Comment O8:

Comment 7 – The final permits should acknowledge that naturally-occurring rainwater in New England exceeds EPA's proposed discharge limitations and allow for submittal of data should a discharge exceed the pH discharge limits.

While the discharge from the terminal has historically met the discharge limits for pH, Global is concerned about the more stringent discharge limits for pH in the draft permits. National Atmospheric Deposition Program ("NADP") data shows that rainwater in the New England region often has a pH below the proposed discharge limitation of 6.5-8.5 S.U. (see attached Exhibit A). Based on the NADP data, it appears that rainwater in New England contains pH levels below 6.0 S.U.

As the Global terminals are petroleum storage and distribution facilities, there are no processes that alter pH. It appears that some level of natural buffering occurs, resulting in pH in stormwater above 6.0 S.U., due to contact with soils and impermeable surfaces at the terminals. However, as this natural buffering is limited and outside the control of Global, EPA should acknowledge that the pH of rainwater in this area is acidic, and that this is a natural condition that impacts the stormwater discharge.

The draft permits should be modified to include that a discharge below 6.5 S.U. or evidence that the receiving waterbody's pH level fluctuated more than 0.2 S.U. during a storm event do not constitute a violation of the permits. Further, Global suggests that EPA allow for collection of rainwater for analysis and submittal to EPA where pH ranges in the discharge may be more acidic than allowed.

Response to Comment O8:

See Response to Comment L8, as the comment is substantially identical.

<u>Comments submitted which pertain to Gulf Oil Terminal (#MA0001091):</u>

Comments submitted by Christopher E. Gill, Terminal Compliance Manager, Gulf Oil Limited Partnership:

Comment P1:

Comment 1: Part I.A.1, Table – Frequency of Monitoring for VOCs and SVOCs

The table in Part I.A.1 of the draft permit lists the effluent monitoring requirements and includes monthly monitoring for benzene, benzo(a)pyrene, and naphthalene. As shown in Attachment 3 of the Fact Sheet for the Draft Permit (monitoring data from 2009 through 2013), during five years of quarterly effluent sampling (19 events; one month was 'no discharge'), benzene, benzo(a)pyrene and naphthalene were each only detected once at concentrations that did not exceed the proposed discharge limits in the draft permit. This is a 95% non-detect rate for each parameter.

Therefore, based on these results from the past 5 years, we maintain that quarterly sampling for benzene, benzo(a)pyrene and naphthalene provides sufficient characterization of the effluent from the site and is protective of Chelsea River. We request that the monitoring frequency for benzene, benzo(a)pyrene, and naphthalene be changed from monthly to quarterly in the final permit. In lieu of that, we ask for the opportunity to demonstrate that quarterly sampling is sufficient, by proposing monthly sampling for benzene, benzo(a)pyrene, and naphthalene be required for the first year of the permit, after which, if there is no more than one detection of each of these parameters during that time, then the monitoring frequency will be reduced to quarterly.

Response to Comment P1:

See Response to Comment B3, C2, and L2 regarding the monitoring frequencies included in the final permit and the allowances for reductions in monitoring frequencies.

EPA disagrees that the previous five years of monitoring for benzene and monitoring, without limits, for benzo(a)pyrene and naphthalene, included to inform future permit conditions and compliance, have been sufficient to cease or reduce monitoring for these parameters. The

quarterly monitoring frequency required for these parameters in the existing permit was not established to specifically address a pollutant causing impairment to the designated uses in the Chelsea River, for which the facility is identified as a source. Rather, the limited monitoring was designed to screen for pollutants with human health concerns with the potential to be present at the facility. When the permit's previous monitoring program was established, data specific to petroleum hydrocarbons relative to impairments in the Chelsea River were absent. In the reissued permit, benzene, and similarly, benzo(a)pyrene and naphthalene, were selected as indicator parameters for the much larger class of volatile and semi-volatile organic compounds. EPA does not believe quarterly monitoring is sufficient to meet the purpose of utilizing such indicators. As described in Response to Comment L2, effluent variability, and therefore the standard deviation and coefficient of variation, are significant statistical factors that EPA uses to ensure an effluent limitation is sufficient to meet water quality standards. These indices of variability are better quantified through monthly monitoring rather than quarterly monitoring.

Furthermore, EPA disagrees that quarterly monitoring is protective of the Chelsea River. EPA's *Interim Guidance for Performance Based Reductions of NPDES Permit Monitoring Frequencies* does not recommend reducing the monitoring frequency for pollutants with significant environmental or human health concerns. As benzene, benzo(a)pyrene and naphthalene are known, probable and/or possible carcinogens with additive, synergistic or antagonistic effects, EPA maintains that increased monitoring frequencies are necessary to protect human health and the environment. Further, the criterion from which the limitation for benzo(a)pyrene was derived, is less than the currently achievable level at which the compound can be detected. EPA's *Technical Support Document for Water Quality-based Toxics* Control recommends more monitoring requirements and permit conditions where it cannot be definitively demonstrated that a limited parameter, while not detected, is not causing or contributing to an excursion above water quality criteria.[70]

Finally, EPA disagrees that quarterly monitoring provides sufficient characterization of the effluent. With regard to the critical importance of data quality improvements expected from increased monitoring, see Response to Comment B3. To fully characterize the actual pollutant concentrations in the effluent, monitoring would need to be conducted continuously. This approach is neither practical not reasonable given the intermittent nature of discharges, the cost of analytical testing organic pollutants and the level of confidence that can be achieved through an appropriately designed monitoring program. EPA believes the monitoring frequencies established in the permit will allow for characterization of the overall water quality of the effluent, minimize the risk of undetected violations, and are appropriate given the increased sensitivity of the receiving water to pollutants of environmental and human health significance. EPA typically evaluates factors beyond compliance with a limit to justify monitoring reductions, including the ratio of measured concentrations to permitted levels, an acceptable coefficient of variation and the importance of a limited parameter (i.e., that a parameter is an indicator of overall compliance rather than a pollutant that is under independent control). Further, EPA cannot determine the ratio of effluent concentrations to limitations[71] for any parameter for which monitoring data are insufficient. As an example, where a parameter limited is 15 mg/L, the parameter is monitored monthly, and the long term average over a three year return interval is

[70] See Chapter 5; EPA/505/2-90-001, March, 1991.
[71] Method described in EPA 833-B-96-001, April 1996.

5 mg/L, then the ratio of the long term average to the limit is 33%, a ratio eligible for a possible reduction to quarterly monitoring.

In sum, the increases in monitoring frequencies for limited indicator parameters were determined on a case-by-case basis as being necessary and appropriate to carry out the provisions of the Clean Water Act and ensure compliance with Massachusetts' Surface Water Quality Standards. However, EPA agrees that reductions in monitoring frequencies may be acceptable for certain parameters following the collection of representative data and the documentation of consistent compliance with permit limitations. Therefore, the final permit specifies that no reduction in monitoring frequency will occur within the first three years following the effective date of the final permit. After this three year period, should monitoring data for the specified parameters support a reduction in monitoring frequency, the Permittee may request such a reduction for those parameters. Rationale supporting such a request must evaluate the representativeness of the monitoring data, permit compliance and any other factors such as facility changes, treatment system optimization, source control or reduction achievements, voluntary coordination of sample timing, additional ambient sampling, community outreach, and other factors that the Permittee believes EPA should consider when the request is evaluated.

Comment P2:

Comment 2: Monitoring for MTBE

The table in Part I.A.1 of the draft permit includes quarterly monitoring for methyl tert-butyl ether (MTBE). MTBE has not been used or stored at the facility since 2007. The quarterly monitoring results from 2009 through 2014, as provided in Attachment 3 of the Fact Sheet for the Draft Permit, show that MTBE has not been detected in the Terminal's effluent for the past 5 years. The Fact Sheet for the draft permit states that "the permit renewal application submitted by the Permittee indicates the average MTBE concentration in 16 samples was 40 µg/L and the maximum concentration was 520 µg/L". The data referred to in this statement is from 2005 to 2009, and in fact the last detection of MTBE in the Terminal's effluent was in June 2007 (11 µg/L; the proposed discharge limit is 20 µg/L). A copy of the relevant page of Table 2 from the permit renewal application is attached. The Fact Sheet also mentioned detections of MTBE in groundwater as a potential source to the stormwater system. While there have been detections of MTBE in groundwater at the site, the effluent data for the past seven years shows that it is not entering the stormwater collection system.

Therefore, we maintain that ongoing monitoring for MTBE under the new permit is unnecessary and does not provide additional protection of Chelsea River. We request that monitoring for MTBE be removed in the final permit.

Response to Comment P2:

EPA notes the clarification on concentrations of MtBE measured in effluent from the facility. Based on this information, MtBE has not been discharged at concentrations that cause or have the reasonable potential to cause, or contribute to an excursion above the applicable water quality

criterion for more than five years. As such, a limit is not required. The effluent limitation of 20 µg/L for MtBE has been removed from the final permit.

However, given the persistence of MtBE in groundwater at the site as noted, and pending the implementation of the stormwater system BMP, which is intended to confirm no pathways exist for groundwater contamination to enter the stormwater conveyance system, monitoring for MtBE is continued in the final permit. Since MtBE persists in groundwater, EPA believes MtBE is an appropriate indicator parameter of infiltration of contaminated groundwater in the years after MtBE was used in petroleum products stored at the facility. MtBE should not be present in the effluent unless migration pathways between groundwater and stormwater exist. Should the implementation of the stormwater system BMP demonstrate stormwater system integrity and MtBE is not detected in the effluent, monitoring for MtBE may be discontinued as specified in the final permit.

Also see Response to Comment M12 and Response to Comment N11.

Comment P3:

Comment 3: Installation of Totalizer or Similar Device

Footnote 4 of the table in Part I.A.1 of the draft permit requires the measuring of flow during discharge using a totalizer or similar device. Currently the Terminal does not have such device and estimates the flow volume. Installation of such a device on the final effluent pipe will require a considerable level of effort to arrange construction activities such that they do not interfere with operation of the stormwater collection system. Therefore, we request that the final permit specify that the Terminal has 180 days after the effective date of the permit to install the totalizer or similar device for measuring final discharge flow.

Response to Comment P3:

EPA agrees that sufficient time is necessary to install the required device such that it does not interfere with the current level of treatment and control of discharges from the facility. Therefore, the final permit includes the requested six month time period for installation of the required flow meter and allows the current method of estimating flow in the interim. Also see Response to Comment L3.

Comment P4:

Comment 4: Annual Sampling for Pollutant Scan and Wet Testing

The draft permit calls for annual sampling of the Terminal effluent and receiving water for a pollutant scan and for whole effluent toxicity testing (WET testing). Sampling of the receiving water is unlikely to provide useful information on the impact of the Terminal's discharge on the water quality of Chelsea River.

First, the draft permit is unclear as to whether the receiving water samples are to be collected from upstream or downstream of the outfall's zone of influence. Footnotes 13 and 16 to the table in Part I.A.1 state that the samples are to be "collected from the Chelsea River at a point immediately outside of Outfall 003's zone of influence at a reasonably accessible location". The Marine Acute Toxicity Test Procedure and Protocol in Attachment A of the draft permit requires the receiving water control sample to be collected immediately upstream of the permitted discharge's zone of influence. Given that the River is tidally influenced, the "upstream" and "downstream" locations will vary over time. Please clarify if these samples are required to be collected from upstream or downstream of the outfall's zone of influence, depending on the tide cycle.

Second, it is unclear how the receiving water data will be used to evaluate compliance with the permit, given the potential for other sources to impact the results. The pollutant scan results and WET testing from the effluent and receiving water are indicated as "report only" in the table in Part I.A.1 of the draft permit. While there are no discharge limits being set for these results, it is unclear how USEPA will use this data. If there is a detection from the pollutant scan or a failure of the WET test, will there be the opportunity for the Terminal to collect confirmation samples or run a confirmatory test before any actions are taken? How will the results from the receiving water be used in comparison to the effluent results? As discussed below, there are a number of other known sources in the area of the Terminal's outfall that could impact the receiving water samples.

Finally, there are a number of other sources within close proximity to Gulf's outfall that could reasonably influence the receiving water results. The point where Outfall 003 enters the River is located behind a bulkhead that is part of the Terminal dock. The whole area between the shore and the bulkhead is reasonably considered part of Outfall 003's zone of influence, as the discharge will eddy towards the bulkhead. Therefore, collecting the receiving water sample from this area is not valid.

The next location from which to collect the receiving water sample would be along the Terminal's dock. Docked barges and ships would have a deleterious effect on the quality of the samples that are collected in that area.

The next reasonably accessible upstream location is adjacent to the Chevron Environmental Management Company's (CEMC) disposal site with MassDEP Release Tracking Number (RTN) 3-0163. Intermittent sheen at the bulkhead area was observed in 1994 at low tide and was assigned RTN 3-11905 which was linked to RTN 3-0163 on August 16, 1996. CEMC is undertaking remedial actions under the Mass. Contingency Plan to address this release. Areas further north could be influenced by discharges from the Global Terminals.

Upstream and downstream locations in the receiving water could also be influenced by discharges from vessel operations as they travel up and down the River and historical releases from other facilities, such as the former Amoco Petroleum terminal that borders the Gulf Oil Terminal to the south. In 1991, MassDEP listed the site as a confirmed disposal site and issued Amoco RTN 3-3550. Remediation at the site was conducted to prevent free-phase petroleum from migrating into the Chelsea River. Based on the most recent Post Response Action Outcome

Inspection and Monitoring Report (AnteaGroup, December 30, 2013), between 3.72 and 4.52 feet of product thickness has been observed in 2013 from one well approximately 150 feet from the Chelsea River.

In addition, in the Fact Sheet that accompanied the draft permit, USEPA states that historically contaminated sediments as well as municipal sources are continuing sources of impairment to the Chelsea River.

Given the extent of other sources of impairment to the Chelsea River as discussed above, it is unclear how analyzing samples of the receiving water will provide an accurate evaluation of the effects of the Terminal's stormwater discharge on Chelsea River water quality.

Response to Comment P4:

EPA disagrees that sampling of the receiving water is unlikely to provide useful information on the impact of the facility's discharge on the water quality of Chelsea River. As described in Response to Comment L2 above, and as the Environmental Appeals Board has held, "Section 308(a) [of the CWA] confers broad authority on the Agency to impose monitoring requirements on any point source." *In re City of Port St. Joe*, 7 E.A.D. 275, 306 (EAB 1997); *accord In re Town of Concord*, NPDES Appeal No. 13-08, slip op. at 36 (EAB Aug. 28, 2014); *see also* 33 U.S.C. § 402(a); *In re City of Moscow*, 10 E.A.D. 135, 170-71 (EAB 2001). "This is true… regardless of whether pollutant discharges are restricted by an effluent limit." *Town of Concord*, slip op. at 36. "[A]n obvious purpose behind Section 308(a)…is to enable EPA to require dischargers to gather data so that EPA can make informed regulatory decisions." *Port St. Joe*, 7 E.A.D. at 311.

EPA is limited in its ability to complete a quantitative reasonable potential analysis, determine ambient background concentrations, and quantify the impact of the facility's discharges alone and in combination with other point source discharges to the receiving water absent ambient monitoring data. Furthermore, EPA selected indicator parameters (i.e., benzene, benzo(a)pyrene and naphthalene) to represent a larger number of petroleum hydrocarbon pollutants, for which Chelsea River is impaired and the facility has been identified as a pollutant source. Therefore, in accordance with 40 C.F.R. §122.44(d)(1)(vi)(C)(3), and to inform future permit decisions, EPA determined that receiving water sampling for the indicator parameters and selected petroleum hydrocarbons they are intended to control is required to show during the term of the permit that the WQBELs for these indicator parameters attain and maintain WQSs such that additional limitations are not necessary. As discussed in the permits' fact sheets, quantification of petroleum hydrocarbons, especially polycyclic aromatic hydrocarbons, also presents significant data quality issues. As a result, EPA determined additional information was needed to quantify the discharges' impacts on the receiving water where effluent data alone is potentially incomplete. Further, without sufficient ambient monitoring data, including data regarding whole effluent toxicity, EPA would be unable to discern the facility's discharges from the effect of all discharges in the same small hydrological area and therefore would be prohibited from setting appropriate, site specific numeric effluent limitations and monitoring requirements. With regard to the critical importance of data quality improvements expected from increased monitoring, see Response to Comment B3. The monitoring requirements for the effluent and receiving water

were determined on a case-by-case basis as being necessary and appropriate to carry out the provisions of the Clean Water Act and ensure compliance with Massachusetts' Surface Water Quality Standards.

See Response to Comment L2 with regard to the purpose of Whole Effluent Toxicity testing requirements. The Whole Effluent Toxicity test chemical analysis of the receiving water (diluent) is included in the protocol for testing of the effluent, Section IV of Attachment A, Marine Acute Toxicity Test Procedure and Protocol. EPA included the parameters required for this testing on the DMRs so the information is more readily available. EPA does not believe reporting the results of this additional testing as part of the facility's submission of DMRs is unreasonable. EPA also did not duplicate the pollutants of concern included in the whole effluent toxicity testing as a separate requirement of the pollutant scan or routine monitoring. The pollutant scan of the effluent and receiving water has been required to more accurately determine "background" or ambient concentrations, and better inform EPA's analysis with regard to whether the effluent causes or contributes to a violation of Massachusetts' Surface Water Quality Standards. The parameters included in the pollutant scan were included to ensure that limitation of an indicator pollutant, in accordance with 40 C.F.R. §122.44(d)(1)(vi)(C), is sufficient to meet WQSs. Aside from being required pursuant to 40 C.F.R. §122.44(d)(1)(vi)(C), and as required by the Marine Whole Effluent Toxicity Test Protocol, ambient monitoring is also a factor EPA considers in performance-based reductions in accordance with the *Interim Guidance for Performance-Based Reduction of NPDES Permit Monitoring Frequencies*. Because ambient monitoring data provide benefits beyond the means to determine NPDES compliance and compliance with WQSs, the weight of this factor can be important for a permittee. Also see Response to Comment P4.

With regard to how these data will be used, EPA requires information to carry out the provisions of the Clean Water Act. For example, ambient conditions and receiving water concentrations of pollutants are critical to assessing the potential impact of the effluent on the receiving water, to determining if concentrations cause, or have the reasonable potential to cause, or contribute to an excursion above water quality criteria, and to establishing appropriate effluent limitations as recommended in EPA's *Technical Support Document for Water Quality-based Toxics Control*. This is especially critical in situations concerning multiple dischargers, where EPA recommends that the steady state mixing equation,[72] of which ambient receiving water concentrations is a key variable, is applied sequentially to determine the resulting instream concentration of a pollutant as a function of distance downstream.[73] Should ambient conditions indicate existing designated

---

[72] The steady state mixing equation is as follows: $C_r = \frac{Q_d C_d + Q_s C_s}{Q_r}$

Where:

C_r	=	Concentration below outfall
Q_d	=	Discharge flow
C_d	=	Discharge concentration
Q_s	=	Ambient flow (i.e., critical low flow)
C_s	=	Ambient concentration
Q_r	=	Flow below outfall (effluent + ambient)

[73] See Chapter 4, EPA/505/2-90-001.

uses are further degraded as a result of the limitations in this permit, more stringent limitations may become necessary to meet WQSs. Likewise, should ambient conditions indicate EPA applied an overly conservative margin of safety where available information was insufficient, a relaxation of limitations or requirements may be appropriate and qualifies as one of the few exceptions to anti-backsliding provisions in Section 402(*o*) of the Clean Water Act.

With regard to Whole Effluent Toxicity testing, this requirement was included because it is a means to evaluate the combined effect of pollutants present in the effluent for which data do not currently exist. EPA will evaluate WET results to determine if the effluent exhibits toxicity which chemical-specific limitations inadequately address. Effluent and receiving water sampling associated with the pollutant scan is primarily included in accordance with 40 C.F.R. §122.44(d)(1)(vi)(C) to ensure additional limitations are not necessary to meet WQSs. EPA included monitoring, without limits, for additional parameters for which existing effluent data are absent or insufficient but which were identified as pollutants of concern. EPA notes that since none of these parameters are limited, a detection does not denote a permit violation. In addition, in the event these additional parameters are detected, a limit does not automatically become necessary. First, EPA does not believe single sample points to be representative of either the effluent or the receiving water and, as a result, has required sampling over a long-term averaging period, with the possibility of elimination of monitoring following this period. Should a pollutant scan or a whole effluent chemical analysis detect parameter concentrations at levels of concern to the permittee, additional confirmatory sampling may be conducted voluntarily. Similarly, if EPA notes levels of concern that warrant a major permit modification, revocation or reissuance, any such action will align with regulatory public notification requirements, and EPA will inform the permittee in advance.

The location and timing of the receiving water sample requirement included in the permit were written with a degree of flexibility for several reasons, including those noted by the commenter. When effluent is entering the receiving water on an outgoing tide, it is more appropriate to collect the receiving water sample upstream of the outfall location. When effluent is entering the receiving water on an incoming tide, it is more appropriate to collect the receiving water sample downstream of the outfall location. The commenter is correct that additional near-field discharges and facilities are likely to impact the receiving water in the vicinity of the outfall. These conditions are relevant to the quality of the receiving water and the effect of adding to the pollutant load through discharges from the facility. The receiving water samples should be reflective of the state of the receiving water. EPA expects that the receiving water samples will not be pristine, given the available ambient data to date and the impairments to designated uses in the Chelsea River. Indeed, the monitoring may indicate lower pollutant levels in the facility's effluent than in the receiving water. However, if the facility does not sample the actual conditions into which its effluent discharges, there is increased uncertainty in assessing the effluent's actual impact on the receiving water. EPA uses this information to ensure that allowing such discharges meets the requirements of the Clean Water Act and complies with Massachusetts' Surface Water Quality Standards.

In sum, EPA believes there is ample justification for these information gathering requirements and that these requirements are reasonable and appropriate. See Response to Comment B3, Response to Comment C2 and Response to Comment L2, pertaining to monitoring frequencies

for Pollutant Scan and Whole Effluent Toxicity testing for the effluent and receiving water and allowances for reductions or elimination.

<u>Comments submitted which pertain to Irving Oil Terminal (#MA0001929):</u>

Comments submitted by Kimble Gorman, Terminal Manager, Irving Oil Terminals, Inc.:

Comment Q1:

1. The proposed effluent monitoring frequencies for benzene, naphthalene, and benzo(a)pyrene should be modified from monthly to quarterly.

Irving's 2005 NPDES Permit required quarterly monitoring for benzene, naphthalene, and benzo(a)pyrene. Irving did not exceed the 2005 NPDES Permit limits for these three compounds throughout the term of the Permit.

As reported in Attachment 3 of the Draft Permit, the concentration of benzene in the effluent ranged from 6.14 to 12 micrograms per liter (µg/L) for the period of 2009 through 2013, which is well below the maximum daily limit of 51 µg/L specified in the 2005 NPDES Permit and the Draft Permit. Since the benzene effluent concentrations have historically been below the current and proposed limit and are consistent throughout each quarter of the year (i.e., no significant monthly variation in concentration), it is believed that quarterly monitoring remains appropriate for this compound.

For the period of 2009 through 2013, naphthalene was detected in the effluent at concentrations generally below the method analytical detection limit, which is 1.09 µg/L (i.e., below the 100 µg/L average monthly limit proposed by the Draft Permit). Since the naphthalene effluent concentrations have historically been below the limit in the Draft Permit and are consistent throughout each quarter of the year (i.e., no significant monthly variation in concentration), it is believed that quarterly monitoring remains appropriate for this compound.

The benzo(a)pyrene concentration in the effluent was typically reported at below the detection limit of 0.109 µg/L during the period of 2009 through 2013. The maximum benzo(a)pyrene ever detected in the effluent was at a concentration slightly above the detection limit in June 2010 (i.e., 0.185 µg/L). The proposed compliance level for benzo(a)pyrene is 0.018 µg/L, but the USEPA indicated that it will accept a compliance level set at the method detection limit of 0.1 µg/L. Since the benzo(a)pyrene effluent concentrations have historically been below the limit proposed in the Draft Permit and the concentrations are consistent throughout each quarter of the year (i.e., no significant monthly variation in concentration), it is believed that quarterly monitoring remains appropriate for this compound.

Response to Comment Q1:

See Response to Comment L2 and Response to Comment P1, as the comment is substantially identical. The permittee may request monitoring frequency reduction after a minimum of three years following the effective date of the permit.

Comment Q2:

2. The proposed monitoring for methyl tert-butyl ether (MtBE) should be eliminated.

Irving's 2005 NPDES Permit required quarterly monitoring for MtBE. As reported in Attachment 3 of the Draft Permit, the MtBE effluent concentrations for the period of 2009 through 2013 ranged from <5 µg/L (non-detect, ND) to 61.4 µg/L, and were typically in the range of 7 to 9.6 µg/L, well below the proposed Draft Permit limit of 20 µg/L. On one occasion during that period (March 2009), MtBE was detected at a concentration of 61.4 µg/L. Since the MtBE effluent concentrations have historically been below the limit proposed in the Draft Permit and MtBE is no longer used at the Revere Terminal, it is believed that monitoring for this compound is no longer necessary.

Response to Comment Q2:

See Response to Comment M12, and Response to Comment N11, as the comment is substantially identical.

As described in the permit's fact sheet, and noted in the comment, from January 1, 2009 through December 31, 2013, concentrations of MtBE ranged from below the PQL to 61.4 µg/L at Outfall 001. As the reasonable potential analysis describes, effluent concentrations have reasonable potential to cause or contribute to an excursion above applicable water quality criteria. For these and the additional reasons detailed in Response to Comment M12 and Response to Comment N11, EPA retains the WQBEL in the final permit of 20 µg/L for MtBE.

Comment Q3:

3. The proposed annual receiving water (i.e., Chelsea River) Pollutant Scan and Whole Effluent Toxicity (WET) Testing Chemical Analysis should be eliminated.

The Draft Permit proposes that Irving be required to conduct a Pollutant Scan of both its effluent and the receiving waters (i.e., Chelsea River) annually during the month of May, as well as WET Testing Chemical Analysis during the month of September. It has not been demonstrated how the results of the receiving stream Pollutant Scan and WET Testing Chemical analytical data will be used in a meaningful way to assess potential impacts of Irving's discharge on the Chelsea River, and why annual stream quality monitoring should be the responsibility of, and undertaken at cost to the permittee. Irving does not object to conducting an annual Pollutant Scan and WET Testing of its effluent. However, the proposed Pollutant Scan and WET Testing Chemical Analysis of the receiving waters should be eliminated.

Response to Comment Q3:

See Response to Comment L2 and Response to Comment P4, as the comment is substantially identical. The Whole Effluent Toxicity (WET) Testing Chemical Analysis is required by the Marine Whole Effluent Toxicity Test Protocol. Since Irving does not object to conducting the

Whole Effluent Toxicity testing of the effluent, EPA expects that the required protocol will be used, in which case, the receiving water sample will be analyzed for the listed parameters. EPA included the parameters required for this testing on the DMRs so the information is more readily available. EPA does not believe reporting the results of this additional testing as part of the facility's submission of DMRs is unreasonable.

Comment Q4:

4. There are several possible errors in Attachment 3, Discharge Monitoring Data, of the Draft Permit.

Attachment 3, Discharge Monitoring Data, includes a table that presents sampling data collected between January 31, 2009 and December 31, 2013 for Flow (from Oil/Water Separators 1 and 2), pH, Total Suspended Solids (TSS), and Oil and Grease (OG). Attachment 3 also presents a summary of the data, including the minimum measurement, maximum measurement, average measurement, standard deviation of the measurements, and the total number of measurements conducted during the period of January 31, 2009 to December 31, 2013.

The summary data presented for pH and OG contain potential errors. The pH measurements listed in the data table ranged from 6.7 to 8.4 (i.e., all measurements were within the acceptable range of measurements specified by Irving's 2005 NPDES Permit). However, the summary table indicates a maximum pH of 9.3 was detected. This measurement, which would represent an exceedance of the 2005 NPDES Permit conditions, is not shown in the data table. The OG measurements listed in the data table ranged from ND to 6.19 milligrams per liter (mg/L) (i.e., all measurements were below the maximum monthly limit specified by Irving's 2005 NPDES Permit). However, the summary table indicates a maximum OG concentration of 139 mg/L was detected. This measurement, which would represent an exceedance of the 2005 NPDES Permit conditions, is not shown in the data table.

Response to Comment Q4:

EPA notes the corrections. The specific errors noted are data points reported prior to the five year period of review but were reported since the issuance of the existing permit, as obtained from EPA's Integrated Compliance and Information System (ICIS). Oil & Grease was reported at 139 mg/L for the December 31, 2008 monitoring period and pH was reported at 9.3 standard units for the September 30, 2008 monitoring period. When EPA updated Attachment 3 to the most recent five year period at the time of draft permit issuance, previously tabulated data was removed. However, these values were not corrected in the summary statistics. Because fact sheets (and their attachments) are generally considered final documents that are not changed in response to comments, EPA acknowledges the noted errors. The Response to Comments serves as the official correction.

Comment Q5:

5. The Draft Permit should specify a time period for compliance with the flow monitoring requirements to provide time for the Terminal to modify the piping and install flow metering equipment.

The Draft Permit requires that Irving monitor the effluent flow rate using a totalizer or similar device. Irving does not currently operate this type of equipment and will need to modify the stormwater collection piping and install new equipment to comply with the proposed Draft Permit flow monitoring requirements. Irving requests that the Draft Permit specify that the Terminal be in compliance with the flow monitoring requirements within 180 days after final permit issuance to provide sufficient time to purchase the equipment and implement the required piping modifications. EPA should continue to allow Irving to estimate flow rates during the 180-day compliance period.

Response to Comment Q5:

EPA agrees that sufficient time is necessary to install the required device such that it does not interfere with the current level of treatment and control of discharges from the facility. Therefore, the final permit includes the requested six month time period for installation of the required flow meter and allows the current method of estimating flow in the interim. Also see Response to Comment L3 and P3.

Comments submitted which pertain to Sunoco Logistics Terminal (#MA0004006):

Comments submitted by Marguerite A. Porrini, Environmental Compliance Specialist, Sunoco Partners Marketing and Terminals L.P.:

Comment R1:

The remediation system that discharge from Outfall 002 to Sunoco's Outfall 001 has not been operational for over 1 year. I am being told that it might not be operational again as other means for disposing of the groundwater associated with the remediation system are being explored. I wanted to double check with you since I noticed that a lot of our requirements in this permit are triggered by the discharge of the remediation system. Will we be able to reopen the permit and revise requirements associated with Outfall 002 if it will no longer be discharging to our outfall 001? I don't want to do it yet as I'm not 100% sure of the plans, I just wanted to keep the option open.

Response to Comment R1:

Should the groundwater remediation effluent be eliminated, the permittee should request a permit modification to eliminate Outfall 002. In addition, the commenter is correct that several conditions included at Outfall 001 are related to the expected quality of effluent at Outfall 002. If Outfall 002 is eliminated, the information on which requirements at Outfall 001 were based may have changed. As a result, the permittee may elect to additionally request permit modification for Outfall 001. The Permittee may request such a modification pursuant to 40 C.F.R. §122.62.

Comment R2:

Since waste water treatment system effluent results are the only results assessed for compliance with the permit requirements SPMT requests the sampling scenario is revised:

For river water: (1) sample at fill to establish baseline pollutant levels, (2) at influent to the waste water treatment system at the beginning and end of discharge to show in-process monitoring and (1) sample at waste water treatment effluent.

For potable water sources: (2) samples at the influent to the waste water treatment system during the beginning and end of discharge to show in-process monitoring and (1) sample at waste water treatment effluent. Baseline samples for anything other than residual chlorine should not be required for potable water.

SPMT asks to eliminate the effluent sample from the tank entirely. By the time analytical results for the effluent from the tank are received, the water will already have mixed with other facility stormwater.

Response to Comment R2:

See Response to Comment L6, as comment is substantially identical. Hydrostatic testing sampling requirements were included to be consistent with facilities discharging this type of effluent region-wide under EPA's Remediation General Permit. However, EPA agrees that the tank effluent monitoring requirements can be eliminated as the effluent at all facilities receives treatment and is subject to effluent limitations after treatment. However, in Response to Comment B7, effluent monitoring has been modified to collect samples representative of multiple stages of hydrostatic test water discharges. If the permittee utilizes municipal water supply for hydrostatic testing, the total number of samples required in the final permits for hydrostatic testing represents a net decrease relative to the total number of samples required for hydrostatic testing in the draft permits.

Comment R3:

Naphthalene sampling requirements – The facility TBEL for naphthalene is more stringent than EPA's lifetime health advisory value of 100 µg/L. SPMT understands that the more stringent requirements are for anti-backsliding requirements, however since the limit has only been exceeded on occasion and SPMT is adhering to a more stringent limit, SPMT requests that this parameter is reduced from the proposed monthly frequency.

Response to Comment R3:

See Response to Comment L2 and Response to Comment P1, as comment is substantially identical. The permittee may request monitoring frequency reduction after a minimum of three years following the effective date of the permit.

<u>Part III. Comments submitted on the Environmental Justice Analysis:</u>

Comments submitted by Ek OngKar Singh Khalsa, Executive Director, Mystic River Watershed Association:

Comment B9:

8. The environmental justice analysis fails to assess cumulative impacts of all seven terminals contributing pollutants to the Chelsea Creek. MyRWA recommends that such cumulative impacts be assessed and evaluated.

Response to Comment B9:

EPA considered cumulative impacts in the development of the permits as prescribed by EPA policy and guidance. See Response to Comment C1. As explained in the EJA, the reasonable potential analyses and any WQBELs established thereafter to comply with water quality standards, inherently account for cumulative effects of multiple discharges of a particular pollutant to the receiving water. When determining whether a permittee's discharge of that pollutant will cause, or have the reasonable potential to cause, or contribute to an excursion above water quality criteria, or which violate Massachusetts' WQSs, and again when calculating a WQBEL that will achieve water quality standards in the receiving water, EPA considered the upstream or background concentration of a particular pollutant in the receiving water, if available. EPA notes, however, that a cumulative impact analysis need not necessarily be quantitative. Therefore, under the scope of the Clean Water Act, EPA's approach considered the data available, the nature of the water quality concerns, the sources of pollutants and their characteristics, and the relationships among those sources following EPA guidance.

As explained more thoroughly in the permits' fact sheets, in developing the effluent limitations and monitoring requirements for the reissuance of the permits, EPA considered cumulative effects of the loading of pollutants to the receiving water, including additive and/or synergistic effects. For example, EPA evaluated and imposed effluent limitations and monitoring requirements for Group II PAHs, which are not necessarily carcinogenic alone, but may enhance the carcinogenic effect of Group I PAHs. EPA considered each facility as a point source in the context of other point sources (including the six other facilities), non-point sources, as they can be discerned using available receiving water data, and the physical and chemical conditions of the receiving water. In general, as the background level of the pollutant increases, EPA's weight of evidence that a pollutant or pollutant parameter causes, has the reasonable potential to cause, or contributes to an excursion above water quality criteria increases. The goal of this process is to ensure that the combined pollutant sources do not result in an excursion above any water quality criterion downstream of the discharge. If the upstream or background concentration already exceeds water quality standards, then that pollutant is typically limited to the water quality criterion for that pollutant at the point of discharge, also referred to as a "criteria end-of-pipe" limit. In this way, since the concentration in the effluent cannot exceed the applicable water quality criterion, the discharge cannot cause the receiving water to exceed the criterion. Thus, pursuant to EPA's authority under the Clean Water Act, the permits address potential cumulative impacts to water quality of multiple sources that otherwise could adversely affect human health or the environment.

See Response to Comment C1, Response to Comment C4, Response to Comment C6, and Response to Comment G1.

Comments submitted by Staci Rubin, Senior Attorney, Environmental Justice Legal Services Director, Alternatives for Community & Environment, Inc., on behalf of residents of Chelsea and East Boston

Comment C6:

II. Below are comments regarding the Environmental Justice Analysis.

The EPA defines environmental justice as the "fair treatment and meaningful involvement of all people" with respect to the development, implementation, and enforcement of environmental laws, regulations, and policies.7 "Fair treatment" means that no group of people, including racial, ethnic, or socioeconomic groups, should bear a disproportionate share of the negative environmental impacts resulting from industrial, municipal, and commercial operations or the execution of federal, state, local, and tribal environmental programs and policies. "Meaningful involvement" means that (a) potentially affected community residents have an appropriate opportunity to participate in decisions about a proposed activity that will affect their environment and/or health; (b) the public's contribution can influence the regulatory agency's decision; (c) the concerns of all participants involved will be considered in the decision-making process; and (d) the decision makers seek out and facilitate the involvement of those potentially affected. That language along with Executive Order 12,898 provides both procedural and substantive obligations for the EPA and MassDEP.

The residents commend the EPA for making efforts to increase public participation in the NPDES permitted process. The residents thank the EPA and MassDEP for holding a public hearing at a convenient location and providing both translated documents in advance of the informational meeting and interpretation at the public hearing. I appreciate that EPA took the time to meet with ACE and members of the Chelsea Creek Action Group on three occasions and held a community meeting last June about the NPDES process. While EPA's Environmental Justice Analysis is the most robust of those I have seen in Region 1, additional analyses are necessary. First, an explanation is needed as to why the EPA selected a 0.5 mile radius to evaluate demographics and impacts. Residents of Chelsea, East Boston, and Revere living beyond 0.5 miles of the Chelsea River attempt to use and enjoy access points to the River and are impacted by the EPA's and MassDEP's decision to issue NPDES permits. According to the Massachusetts Executive Office of Energy and Environmental Affairs, the areas in the 0.5 radius and beyond are identified as environmental justice populations.8

Second, the Environmental Justice Analysis ("EJA") indicated through the screening process that the facilities are located in an area with a significant percentage of people of color and low income residents. The EJA also indicated a significant number of polluting facilities located in close proximity to the facilities at issue for these draft permits. The EJA does not conclude that these populations are overburdened despite evidence to the contrary. Because the location of these seven bulk petroleum terminals are in an area with recognized environmental justice populations and a concentration of environmentally regulated facilities, the agencies have a

responsibility to require substantive changes to the permits and that the facility operators provide community benefits to offset their pollution and associated health risks.

Third, the EJA requires additional health information. EPA's somewhat recently developed tool Community-Focused Exposure and Risk Screening Tool ("C-FERST") should be consulted to identify additional health information for Boston, Chelsea, and Revere such as cancer incidence rates (not merely cancer death rates) particularly for those cancers associated with exposure to benzene, polycyclic aromatic hydrocarbons, and other materials stored and handled at oil terminals. Moreover, there should be some analysis of whether health indicators in the study area or host cities demonstrate health inequities (e.g., whether the health of one racial or ethnic group is significantly higher than other racial or ethnic groups and how they compare with the statewide average). The EJA should include a risk assessment that truly estimates risk of the population that comes in contact with the Chelsea River such as fishermen, kayakers, and volunteers that clean up public beaches and other waterfront locations in the Chelsea River.

The EPA concludes in its EJA that because the agency proposes effluent limits in the draft permits that will ensure the facilities do not cause or contribute to violations of water quality standards, the permitting action will not have a disproportionately high and adverse human health and/or environmental effect. This conclusory statement does not discuss how the effluent limits will improve the water quality nor does it discuss how resident health in the abutting neighborhoods is improved or worsened by permitting these facilities. The concept of environmental justice requires substantive improvements in overburdened communities, such as Chelsea, East Boston, and Revere. The EPA and MassDEP should require a net decrease in pollutants. The agencies could require the facilities to establish that they will release no pollution or offset the pollutants by an amount greater than their pollutant releases in the Mystic River Watershed. The EJA notes that the Chelsea River is not of a high enough quality to support recreation. Yet, the EJA makes no effort to discuss how permitting seven bulk petroleum terminals will affect the quality of life for nearby residents.

Response to Comment C6:

As part of the EJA, EPA selected an area of focus that encompassed all seven bulk petroleum storage facilities and populations within 0.5 miles of the Chelsea River including portions of Chelsea, East Boston, and Revere, Massachusetts. Because the permits at issue regulate discharges primarily to the Chelsea River and because NPDES permits in general regulate discharges in accordance with water quality standards established pursuant to the Clean Water Act, the Chelsea River represents a logical location of focus for the study of potential human and/or ecological impacts. EPA then chose an area that encompassed populations within 0.5 miles of the Chelsea River to assess whether disproportionate impacts might be experienced by populations as a result of issuance of the seven NPDES permits. EPA chose a 0.5 mile study area that would capture characteristics relevant to the population most likely to be impacted by the permit renewals, while not so large as to influence the analysis with characteristics of populations that might experience lesser or even no impacts as a consequence of issuance of the seven permits. As a result of comments received on the EJ Analysis that asked that the Agency expand the EJ Analysis radius, EPA has updated Sections III.A, III.B, and III.C of the EJ Analysis. EPA now describes the social demographics, environment, and health of the

community located within 1.0 miles of the Chelsea River. The results of this new analysis can be found in Appendix 1.

As explained in Response to Comment C1, Executive Order 12898 (Federal Actions to Address Environmental Justice in Minority Populations and Low-Income Populations) grants no additional authority to EPA; any NPDES permit renewal must be in accordance with applicable laws and regulations, including the Clean Water Act. EPA thoroughly considered environmental justice issues in the development of the draft permits and believes that it has used its authority under the Clean Water Act to incorporate appropriate limits and conditions sufficiently connected to water quality impacts or technology-based limitations that address environmental justice concerns documented in the EJA. Moreover, the final permits incorporate a majority of the specific changes requested by the commenter in Comment C2. See Response to Comment C2. Inasmuch as the commenter may be asserting that the Executive Order requires that the permittees be compelled to provide the "community benefits" referred to in Comment C5, it is not clear to EPA how several of these requests are connected to water quality impacts or technology-based limitations. Nor has the commenter provided such an explanation. Regarding the request for an independent data interpreter, see Response to Comment C5.

The commenter also requests that EPA consult C-FERST for cancer incidence rates (not merely cancer death rates). This tool is still being refined and has not been formally released, and as such, it is not appropriate for public use at this time. However, cancer incidence rates are available from the Massachusetts Department of Public Health ("MassDPH") by community for select cancer types. Cancer incidence rates for several cancer types have been presented in Appendix 2 based on the tumor types associated with key petroleum constituents included in the NPDES permits. Two key constituents of petroleum that are carcinogenic and included in the NPDES permits include benzene which is known to cause leukemia in humans and benzo(a)pyrene, a PAH that is a probable human carcinogen based on evidence that it causes stomach, larynx, and esophageal tumors in laboratory animals. While other PAHs with carcinogenic potential are present in petroleum products (e.g. benzo(a)anthracene), as a matter of policy, EPA indexes the toxicity of carcinogenic PAHs to that of the more thoroughly studied benzo(a)pyrene. Consequently, benzo(a)pyrene is commonly used as a surrogate for these other carcinogenic PAHs. Other constituents in petroleum include hydrocarbons (e.g. toluene, xylenes), but these have not been classified as to their carcinogenicity by EPA or the International Agency for Research on Cancer.

Standard incidence ratios (SIRs)[74] for select tumor types relevant to several key constituents included in the NPDES permits are presented in Appendix 2. Because the State aggregates data over a five year interval to generate the SIRs, incidence rates from two different reporting periods corresponding to 2003-2007 (Table 1) and 2005-2009 (Table 2) have been presented.

---

[74] Standard Incidence Ratio (SIRs) represent the observed number of cancer cases (for the period of interest) divided by the expected number of cases based on state-specific average annual age-specific incidence rates, which is then multiplied by 100. A SIR is an indirect method of adjustment for age and sex that describes in numerical terms how a city or town's cancer experience in a given time period compares with that of the state as a whole. An SIR of *more than 100* indicates that a city/town's incidence of a certain type of cancer is *higher than expected* for that type of cancer based on statewide average annual age-specific incidence rates whereas a SIR less than 100 is *lower than expected* based on statewide average age-specific incidence rates.

Additionally the 95 percent confidence interval[75] around the SIR has also been presented indicating whether the observed number of cancer cases was significantly different[76] from the expected number of cases, or whether the observed difference was most likely due to chance.

In helping to interpret the SIR findings presented in Appendix 2, one notices that several tumor types rose to the level of statistical significance in several communities (depicted by shading in Appendix 2, Tables 1 and 2) however many of the elevated incidence ratios had very wide confidence intervals suggesting that the incidence ratios reported are quite unstable. Specifically, elevated incidence ratios of larynx cancer in females (Chelsea 2003-2007, Everett 2005-2009) and stomach cancers in females (Chelsea, Boston, and Everett 2005-2009) were noted. Unfortunately, the cause or causes for the statistically significant elevated SIRs cannot be ascertained from the available information. However, one can begin to look for trends over time to help ascertain whether tumor specific SIRs may be elevated chronically in communities of interest. In doing so, SIRs for stomach cancers were not available for the 2003-2007 reporting period so statements about the longevity of these elevated ratios cannot be made. The elevated SIRs of larynx cancers in females observed in Chelsea 2003-2007 could not be corroborated with SIRs from the 2005-2009 reporting period as too few cancers of the larynx in females were observed during the 2005-2009 reporting period. In contrast, data were available for both reporting periods for Everett yet the SIR of larynx cancer in females did not rise to the level of statistical significance across both five year periods 2003-2007 and 2005-2009 suggesting that the elevated ratios observed may have been influenced by a short-term spike rather than a chronically elevated increase in the number of cases.

In addressing the comment regarding health inequities in the region, while some data on health disparities by race and ethnicity for things such as births, perinatal information, health care and risk factors, and causes of death are available for the cities of Boston and Revere,[77] similar data for the cities of Chelsea and Everett are either unavailable and/or highly unstable (e.g. because counts are so low for the data period used by the MassDPH). Consequently, a few highlights from a MassDPH 2007 report summarizing health disparities for various regions of Massachusetts including the Greater Boston Region (which includes Boston, Chelsea, Revere, Winthrop, and Brookline) were chosen and have been reported in Appendix 3.[78] Moreover,

---

[75] A confidence interval is a range of values around a measurement that indicates the precision of the measurement. If the 95% confidence interval range does not include the value 100, then the number of observed cases is significantly different from the expected number of cases. When the confidence interval around the SIR does contain the value 100, there is no significant difference between the observed and expected numbers. Statistically, the width of the confidence interval reflects the size of the population and the number of events; smaller populations and smaller observed numbers of cases yield less precise estimates that have wider confidence intervals. Wide confidence intervals indicate instability, meaning that small changes in the observed or expected number of cases would change the SIR a great deal.

[76] 'Significantly different' means there is at most a 5% chance that the difference between the number of observed and expected cancer cases is due solely to chance alone.

[77] See http://www.mass.gov/eohhs/researcher/community-health/masschip/health-category/health-equity-disparities.html.

[78] For complete listing see *Racial and Ethnic Health Disparities by EOHHS Regions in Massachusetts*. Massachusetts Department of Public Health, November 2007 available at http://www.mass.gov/eohhs/docs/dph/research-epi/disparity-report.pdf.

caution should be made in extrapolating these findings to the study area around Chelsea River because these statistics were derived from a regional dataset which is heavily influenced by the racial, ethnic, and age profile of the Greater Boston Regional population.

In reviewing premature mortality rates (a good indicator of overall health) as presented in Appendix 3, and focusing on the data in the Greater Boston Region which tends to be younger than the comparable statewide population used for comparison, White Non-Hispanics, Black Non-Hispanics and Asian Non-Hispanics tended to have a higher premature mortality rate in comparison to the same populations groups state-wide whereas Hispanics in the Greater Boston Region tend to have a lower premature mortality rate based on data collected during the 2003-2005 reporting period. Infant mortality rates for Black Non-Hispanics in the Greater Boston Region slightly exceeded the statewide rate used for comparison, whereas the infant mortality rate for other races and ethnic groups in the Greater Boston Region were lower than the statewide rates for 2003-2005. The rates by which all race and ethnicity groups sought medical assistance at a hospital for pediatric asthma (emergency department visits), diabetes (hospitalizations), and hypertension (hospitalizations) were almost always greater in the Greater Boston Region than compared to the statewide rate for 2003-2005 suggesting that these diseases are either less well managed or that the symptoms require more serious medical assistance in the Greater Boston Region. However the death rates reported for 2003-2005 for diabetes and heart disease in the population groups for the Greater Boston Region, save for White Non-Hispanics, were the same or lower than for comparable population groups in the state, suggesting that while these populations may seek medical assistance for these conditions at a greater rate, they are not dying from these diseases at greater rates than was observed statewide 2003-2005.

As to the suggestion that EPA should conduct a risk assessment to characterize the risk to fishermen, kayakers, and volunteers who may come in contact with the Chelsea River, a site-specific human health risk assessment is beyond the scope of an EJ Analysis conducted in conjunction with issuance of permits under the Federal Clean Water Act. EPA notes, however, that WQBELs in the permits are derived from water quality criteria that have been developed to protect against adverse impacts to human health and the environment. The WQBELs are required where EPA determined they were more stringent than TBELs and are necessary to meet Massachusetts' WQSs for the designated uses of the Chelsea River. As a Class SB waterbody, these uses include primary and secondary contact recreation as well as fish consumption and shellfishing.

In EPA's judgment, the reissued permits will lead to water quality improvements in the Chelsea River. The Chelsea River is listed as impaired for its designated uses for the pollutant "petroleum hydrocarbons," the cause of which is "petroleum." Since Massachusetts' WQSs do not contain numeric or narrative criteria specifically for petroleum or petroleum hydrocarbons for Class SB waters, EPA used the state's narrative criterion for toxics, which states, "waters shall be free from pollutants in concentrations or combinations that are toxic to humans, aquatic life or wildlife." The pollutant "petroleum hydrocarbons" consists of many hundreds of individual compounds, the precise combination and composition of which can vary significantly, but are known to contain several pollutants or pollutant classes that exhibit toxicity and pose an environmental or health risk. Rather than limiting all the possible individual compounds in "petroleum hydrocarbons" to meet the narrative criterion, EPA determined that it is more

protective and efficient to regulate indicator parameters that share physical and/or chemical characteristics with other pollutants in the pollutant class. Therefore, EPA selected the most conservative individual toxicants for which *National Recommended Water Quality Criteria* exist, as indicator parameters. EPA determined that for the most limiting parameters, the most stringent applicable criteria were the human health criteria established for protection via the consumption of aquatic organisms. Additionally, the final permits contain several narrative requirements applicable to all designated uses based on 314 C.M.R. §4.05(5). Monitoring requirements specific to these criteria, and based on the impairments to the Chelsea River have also been included, mainly for pollutants for which monitoring data either have not been collected or insufficient data exist to complete an analysis to determine if the concentrations in the discharges cause, or have reasonable potential to cause, or contribute to an excursion above water quality criteria. Overall, the re-issued permits include more stringent numeric limits, technological, operational, and implementation controls to address pollutant loading significantly beyond that of the previous permits and impose narrative and non-numeric TBELs. They also include enhanced monitoring and sampling requirements for both the effluent and receiving water to assess additive and/or synergistic effects that might exceed water quality standards, including biological monitoring via toxicity. Thus, the permits decrease pollutant discharges to the Chelsea River and increase the level of environmental protection. Furthermore, the permitted facilities are subject to specific discharge prohibitions (e.g., tank bottom and bilge water) and requirements for on-going operation and maintenance, including annual inspections, corrective actions, and requirements to ensure that all collection and treatment systems are properly operated and maintained. These detailed permitting requirements provide EPA and MassDEP with additional assurance that the discharges from these facilities are being effectively addressed. For these reasons, EPA believes the reissued permits will improve water quality in the Chelsea River.

See also Response to Comment C1.

Comments submitted by Staci Rubin, Senior Attorney, Environmental Justice Legal Services Director, Alternatives for Community & Environment, Inc., on behalf of Alternatives for Community & Environment, Inc., the Chelsea Collaborative, and Neighborhood of Affordable Housing.

Comment D1:

This comment letter is filed on behalf of Alternatives for Community & Environment ("ACE"), the Chelsea Collaborative, and Neighborhood of Affordable Housing ("NOAH"). The three organizations have partnered for almost two decades working to improve the water quality of the Chelsea River and to achieve environmental justice in Chelsea and East Boston. ACE, the Chelsea Collaborative, and NOAH adopt the comments made by residents in Chelsea and East Boston filed separately by ACE.

ACE, the Chelsea Collaborative, and NOAH commit to continue to protect the Chelsea River and urge the United States Environmental Protection Agency and Massachusetts Department of Environmental Protection to commit additional resources to environmental justice efforts in and around the Chelsea River.

Response to Comment D1:

EPA appreciates the long-term efforts of these organizations to improve water quality of the Chelsea River and their work to achieve environmental justice for the communities. Regarding the commitment of additional resources, EPA notes that ACE was recently awarded an EPA Urban Waters grant to be used to assist Environmental Justice communities in implementing the "Chelsea Creek Action Group Urban Waters Community Improvement Plan." EPA has awarded funds to ACE and the Chelsea Collaborative in the past as well. The Agencies continue to encourage ACE, Chelsea Collaborative, and the communities along the Chelsea River to seek appropriate local, state and federal funding. Please see Response to Comment C1 through Response to Comment C6 regarding the comments submitted separately by ACE.

Comments submitted by Matthew Frank, President, Chelsea City Council:

Comment F1:

Matthew Frank. I'm president of the Chelsea City Council. Welcome, EPA and DEP to my chambers.

My concern is, I am not sure if the cumulative effects of each of the seven terminals is being taken into account. I do understand that, if you regulate each one, then, in theory that would work out. But, if you have seven, and they're all discharging the maximum amount, I do have a concern that it could lead to way too much. The same way that one person speaking with their indoor voices, as those in the education field would say, is fine. But, if everybody in this room started speaking kind of in that rabble, rabble way that sometimes people do, it becomes unbearable and you can't hear what's going on.

I also do have concern about the Environmental Justice half mile assessment. I represent a district in the city over near, I generally say, between the Home Depot, the wind turbine, and the water tank up at Soldier's Home. And I know Sue is one of my constituents. We're not within the half mile radius. But, we are on the Mill Creek, which comes off of the Chelsea Creek. And anything that happens in the Chelsea Creek goes up the Mill Creek right into that neighborhood. We have many under water waterways that run underneath the neighborhood. The flooding of my basement every time it rains kind of help proves that. Even if the sump pump is going full blast, there's always water down there, because the water's running through. Because it used to be the clay pits as most people in this room remember. So, that is a concern of mine, that we actually have four buildings in my neighborhood right on the creek that house people who have they're -- that are run by the housing authority. So, the big red building at that end, at the very end of Clark Ave. We also have a lot of low income residents right on the Creek, including a minority population, of Latino descent. I know, there's also a lot of white people in my neighborhood. But, we do have a minority population specifically on the Chelsea Creek itself.

I would say there is a concern that the permitting process doesn't include accidents that happened outside of that one particular pipe. So, if oil gets spilled in the transferring process, it's my understanding that the permits don't include anything that is happening outside of what they're putting into the pipe and that's going into the water.

The last thing I would say, and that would -- it might not be completely relevant. But, one of the concerns I've always had as a member of the planning board, then a member of the council, and now as president, is, people often say to me, why do we need to have these seven oil tanks? Why do we need all of this industrial use on the waterfront? I personally get asked all the time why I let that happen. And my concern is, I let that happen because we can't do anything else. The state tells us this has to be maritime use, specifically where these tanks are, it has to be maritime industrial use because of a state regulation. And that's a real concern of mine, because we try to clean up the creek. And we've done so -- we pull carriages out of the water. I've personally been up to my knees pulling stuff out of the creek. And no matter what we do, we still end up with oil tanks on the creek. We still end up with pollution coming into the community. And I realize that the limits have been reduced in some of these new permits. But, it's still happening. And when you've got seven, my hope is that we can at least -- that's something in the future we can push away.

But, in the meantime, I would like to see gradual movement, the same way that the auto regulations are pushed 20 or 30 years into the future, we already kind of know what the federal government wants in 20 or 30 years. My hope is that we can build a timeline for things like these permits that say, okay. Well, today, technology will only allow, you know, five – milligrams per liter. But, maybe in five years, it could be four. And with the hope that we could push facilities to get to zero.

But, thank you so much. Like I said, welcome again.

Response to Comment F1:

See Response to Comment C6 regarding the use of a half-mile radius in the EJA. See Response to Comment F1 in Part I for the full comment and response.

Comments submitted by Madeleine Scammell, Chelsea Board of Health:

Comment G1:

Thank you. My name is Madeline Scammell. I'm a resident of Chelsea. I serve on the Board of Health. I'm an environmental health scientist myself. I study cumulative risk analysis. I'm one of EPA's grantees under the STAR program in partnership with the Chelsea Collaborative. But, I don't have to do any really fancy analyses to recognize cumulative exposures as in this situation. And so, I guess, I have a comment and a question, which I understand you can't answer now. But, I would like to be on the record.

I feel like the Environmental Justice analysis that was done was nice for characterizing our city as it is and the health of Chelsea Creek, or Chelsea River as it's called. But, the conclusion just surprises me. EPA acknowledges that the Chelsea River and surrounding communities are impacted by many environmental burdens. Yes. That is the case. And yet, has determined that the facility's discharges will not result in disproportionately high environmental effects.

The benzene concentrations that are allowed, 51 micrograms per liter, are typical of NPDES permits and are not lower than this typical amount for any of the seven permits that are being considered today. And seven permits equals a lot more than 51. I don't know what the flow rate is in terms of what will actually be discharged to result in the water quality concentration of benzene. But, I do know that toxic effects on aquatic species have been found at 700 micrograms per liter. So, that's not a whole lot more than 51 without doing any calculations. And while 51 micrograms per liter is a low amount, it's orders of magnitude higher than the drinking water standard. And we don't drink that water, of course. But, we do muck around in it sometimes, like on April 26th when we're going to clean the Chelsea Creek.

And as an Environmental Justice community, it's not so much about the health effects as it is quality of life. And I feel like EPA Region 1 has a real opportunity to make a point that 51 may be typical. But, here, we can reduce it and we can make a difference in terms of reducing cumulative effects on our environment and our ability to enjoy the environment. So, with that, I will just thank you again for being here.

Response to Comment G1:

EPA acknowledges that certain environmental burdens may affect the quality of life for impacted communities. As noted in Response to Comment C1, the Clean Water Act does not appear to provide any general authority to impose permit conditions based on environmental justice considerations that are unconnected to water quality impacts or technology-based limitations. As such, permit conditions focus on TBELs, both numeric and non-numeric, and requirements such as control measures, including best management practices, and corrective actions, and water quality impacts, including numeric limitations and narrative requirements. As noted in the EJA, reasonable potential analyses and any WQBELs established thereafter to comply with the Clean Water Act and Massachusetts' WQSs take into account the cumulative effects of multiple contributors of a particular pollutant to the receiving water, including known concentrations of existing levels of the pollutant in the receiving water. Additionally, effluent limits are derived from criteria that have been developed to protect against adverse impacts to human health and the environment. As written, the final permits include effluent limits and additional conditions that will ensure discharges from the permitted facilities do not cause or contribute to excursions above Massachusetts' water quality standards, including narrative criteria applicable to toxic pollutants, including benzene, a limiting pollutant for petroleum hydrocarbons with applicable *National Recommended Water Quality Criteria.* The applicable criteria for multiple toxic pollutants, including benzene, were applied directly at the point of discharge. Thus, EPA concluded in the EJA that EPA's reissuance of the seven NPDES permits will not have disproportionately high and adverse human health or environmental effects on minority or low-income populations within the meaning of Executive Order 12898. Also see Response to Comment C1 and Response to Comment G1 in Part I.

While the commenter appears to suggest that adding the concentrations of benzene in the discharges of all the facilities together equals an in-stream concentration of benzene in the Chelsea River higher than the current human health "organism-only" criterion for benzene (51 µg/L), a simple summation of the limits is not a valid method for determining whether the water quality criterion for benzene will be exceeded, because the limits and the criterion are

concentration-based, not mass-based. Also see Response to Comment G1 in Part I, above. EPA continues to believe that the conclusion in the EJA is valid, and the commenter's suggestion provides no basis to alter that conclusion.

Although understandably not mentioned in the comment, the Region is aware that EPA proposed draft updates to the *2002 National Recommended Water Quality Criteria* for human health after the public comment period for these permits expired.[79] Of the 94 chemical pollutants for which EPA has proposed draft updated criteria, the permits include effluent limitations to the Chelsea River for two: benzene and benzo(a)pyrene. In the permits, effluent limits for benzene are generally set at 51 µg/L – although limits at some of the outfalls are as low as 5 µg/L[80] – and benzo(a)pyrene limits are set at 0.018 µg/L. Based on Massachusetts' WQSs, EPA derived the WQBELs in the permits for benzene using the upper bound of the current human health "organism-only" criteria for benzene, 51 µg/L[81] and for benzo(a)pyrene using the current human health "organism-only" criterion for benzo(a)pyrene, 0.018 µg/L.[82] Indeed, the Region is required to apply the 2002 recommended criteria; it cannot use the draft updates to the recommended water quality criteria to derive effluent limits in a NPDES permit unless and until the criteria are finalized by EPA, adopted by Massachusetts into its WQSs, and those standards are reviewed and approved by EPA.[83] Accordingly, the Region has not used the draft criteria to conduct reasonable potential analyses or derive effluent limits in these permits.

In the recent draft update to the recommended criteria, EPA has proposed to lower the criteria for benzene and benzo(a)pyrene to a range of 6.2 to 23 µg/L[84] and 0.00084 µg/L, respectively.[85] The release of these draft criteria, however, does not change the Region's conclusion in the EJA that

---

[79] Updated National Recommended Water Quality Criteria for the Protection of Human Health, 79 Fed. Reg. 27,303 (proposed May 13, 2014).

[80] Effluent limits for the seven facilities differ based on, among other things, whether the limit is technology-based or water quality-based and whether it applies to an internal or primary outfall.

[81] A range of cancer slope factors in EPA's Integrated Risk Information System are used to derive the recommended criteria for benzene, resulting in a human health "organism only" range of 14 µg/L to 51 µg/L (see IRIS Benzene CASRN 71-43-2 (01/19/2000)). However, EPA recommends the use of the upper limit in the criteria table to establish the upper bound of the average ambient concentration that should not be exceeded and considers such a criterion scientifically defensible (see EPA-822-R-02-047, November 2002).

[82] *National Recommended Water Quality Criteria*, U.S. EPA, http://water.epa.gov/scitech/swguidance/standards/criteria/current/index.cfm.

[83] 40 C.F.R. § 131.21; 314 CMR §4.05(5)(e); *In re City of Attleboro*, 14 E.A.D. 398, 460 (EAB 2009) ("[T]he Region is bound by state water quality standards that require application of the criteria set forth in the [2002 National Recommended Water Quality Criteria] guidance, unless the state develops site-specific criteria."); *In re Phelps Dodge Corp.*, 10 E.A.D. 460, 478 n.10 (EAB 2002) ("[T]he Region's obligation, as the permit issuer, is to apply the CWA statute and implementing regulations in effect at the time the final permit decision is made, not as the statute or regulations may exist at some point in the future."); *In re City of Moscow*, 10 E.A.D. 135, 165-66 (EAB 2001) ("[U]ntil such time that [the state] actually changes its water quality criteria for DO_2, the Region has no choice but to apply it."); *In re Homestake Mining Co.*, 2 E.A.D. 195, 199-200 & n.8 (CJO 1986) ("Permit terms and conditions cannot be based on proposed rules since [the proposed rules] are tentative and may change before being promulgated in final form.").

[84] The range of updated recommended criteria for benzene for human health "organism only" is 6.2 µg/L to 23 µg/L. Similar to the current criteria, the criteria were derived using a range of cancer slope factors (see EPA 820-D-14-009, May 2014).

[85] *See* 79 Fed. Reg. 27,303; *see also Side-by-Side Comparison of Draft 2014 Updates and Current EPA Recommended Ambient Water Quality Criteria for the Protection of Human Health*, U.S. EPA, http://water.epa.gov/scitech/swguidance/standards/criteria/current/hhdraft.cfm.

the re-issuance of the permits will not have disproportionately high and adverse human health or environmental effects on minority or low-income populations. First, the draft updated criteria for benzene and benzo(a)pyrene, which were made available for public comment to solicit scientific views for roughly 90 days, a period that ended on August 13, 2014, are only draft criteria.[86] Consequently, the draft criteria are currently being assessed in light of the comments received and have been neither finalized at the levels proposed nor actually recommended by EPA for inclusion in any state's WQSs. Depending on the scientific views or other issues raised during the comment period, the draft updated criteria recommendations may change.[87] Accordingly, EPA has not made an "unequivocal determination" prior to the issuance of these seven permits that the existing benzene and benzo(a)pyrene criteria do not provide the requisite protection.[88]

Furthermore, future actions are required by Massachusetts before effluent limits may be based on the draft updated water quality criteria for benzene and benzo(a)pyrene. The draft criteria, even when finalized, will not constitute regulations or new WQSs and are not automatically incorporated into a state's WQSs. Rather, "EPA's recommended water quality criteria provide technical information for States…to establish water quality standards under the Clean Water Act to protect human health."[89] In other words, the EPA recommended criteria, which were developed under certain assumptions at a national level, only have a regulatory impact once they have been adopted into WQSs by Massachusetts. Although EPA's recommended criteria are generally adopted, states have the discretion to adopt them, modify them to reflect site-specific conditions, or adopt different criteria based on other scientifically-defensible methods.[90] Thus, states ultimately conclude, based on state-specific factors, what criteria are protective of human health and will be applicable in their WQSs. Consequently, the state has yet to issue any conclusion, tentative or otherwise, regarding the protectiveness of the current criteria in Massachusetts waters.[91] To conclude at this point that a different concentration might not ultimately be selected in Massachusetts for site-specific reasons is premature. Thus, the Region believes that the Administrator's issuance of these draft updated recommended criteria does not invalidate the Region's conclusions in the EJA regarding the effects of the re-issuance of the permits on minority or low-income populations.

Comments submitted by Staci Rubin, Senior Attorney, Environmental Justice Legal Services Director, Alternatives for Community & Environment, Inc.

---

[86] EPA originally established a comment period of just over 60 days, 79 Fed. Reg. 27,303, and later extended it for an additional 30 days in response to stakeholder requests, Extension of Request for Scientific Views for Updated National Recommended Water Quality Criteria for the Protection of Human Health, 79 Fed. Reg. 35,544 (June 23, 2014).

[87] *See* 79 Fed. Reg. at 27, 304.

[88] *See In re Shell Gulf of Mexico*, OCS Appeal Nos. 10-1 to 10-04, slip op. at 74-75 (EAB Dec. 30, 2010).

[89] 79 Fed. Reg. at 27,303; *accord* 79 Fed. Reg. at 35,544 (June 23, 2014).

[90] U.S. EPA, *Human Health Ambient Water Quality Criteria: Draft 2014 Update* (May 2014), at 1, *available at* http://water.epa.gov/scitech/swguidance/standards/criteria/current/upload/Human-Health-Ambient-Water-Quality-Criteria-Draft-2014-Update-Factsheet.pdf; *see also* 79 Red. Reg. at 27,304.

[91] Even if the draft updated criteria for these pollutants are finalized by EPA at the proposed levels, they will not be the applicable water quality criteria in Massachusetts unless and until the state revises its regulations to adopt them. 314 CMR §4.05(5)(e). In addition, consistent with 40 C.F.R. §131.21, new or revised water quality criteria adopted into law or regulation by a state are in effect for Clean Water Act purposes only after EPA approval.

Comment I1:

Good evening. My name is Staci Rubin. I am the senior attorney and director of the Environmental Justice Legal Services Program at ACE, Alternatives for Community and Environment. ACE is providing legal services to residents in Revere, Chelsea and East Boston regarding the Draft NPDES Permits for the seven facilities that are the subject of tonight's public hearing. My comments tonight are on behalf of ACE. And we, along with the residents of Chelsea, East Boston and Revere will submit detailed written comments by May 12th.

Thank you to both EPA and DEP for holding tonight's hearing at a convenient location and providing translated documents in advance, as well as the interpretation for tonight's public hearing. I appreciate that EPA took the time to meet with ACE and members of the Chelsea Creek Action Group on three occasions in 2013, and held a community meeting last June about the NPDES process.

There is an anti-backsliding requirement for NPDES permits, which means that the requirements of a subsequent or newly issued permit may not be less stringent than previous permits. As has been said, the Chelsea Creek water quality continues to disappoint. The Commonwealth has classified the Chelsea Creek as a Class SB water body, meaning that its water quality should be able to support wading, swimming, fishing, boating and a health fish and aquatic life community. Yet, the water has not achieved this standard. No matter how far away this standard appears, the water quality should improve notwithstanding sanitary sewer overflows, combined sewer overflows and marine vessel pollution.

My remaining comments concern all seven permits. First, my comments concerning the permits from a technical perspective. The Chelsea River is listed as a Category 5 waters, which requires a total maximum daily load on the final Massachusetts year 2012 Integrated List of Waters under the Clean Water Act. This is both Sections 303(d) and 305(b). The pollutants and conditions requiring a total maximum daily load are ammonia, fecal coliform, dissolved oxygen, polychlorinated biphenyls in fish, petroleum hydrocarbons and others. The designated uses for the Chelsea River are impaired. Sources of those impairments include the petroleum facilities at issue tonight. EPA and DEP state that the Draft Permit sufficient limit petroleum hydrocarbons and total suspended solids to ensure that discharges do not cause or contribute to the aquatic life impairment. EPA and DEP cannot make this statement because there is no total maximum daily load limits that have been set for the Chelsea River. These permits, all seven, should not be issued prior to establishment of the total maximum daily load limits. The state of Rhode Island recently established these limits for a portion of the Blackstone River. And that's a river that has endured heavy industrial use similar to the Chelsea Creek. The Commonwealth and EPA could incorporate this effort as a model. Further, the Mystic River Watershed Association has recorded data for the Chelsea Creek which could help establish a baseline for these numbers.

Should EPA and DEP disagree and decide to issue these final permits without first approving total maximum daily loads, then I respectfully request additional conditions for these permits. The pollutant scans for each facility outfall should be required quarterly, not annually. Including for ethanol, for facilities that store or manage ethanol. And the permittees should be required to conduct the pollutant scan, effluent testing at regular quarterly intervals. The permittees should

be required to conduct the whole effluent toxicity testing quarterly, not annually. And the permittee should be required to report immediately when they exceed the total flow rate and the maximum daily flow rate. Furthermore, both EPA and DEP should conduct more frequent and unannounced inspections of all seven facilities, and issue fines when the facilities are out of compliance. All seven of the terminals have been out of compliance at least one quarter during the past five years. And to my knowledge, EPA or DEP did not take any enforcement action. The EPA should also establish a website specifically dedicated to the Chelsea Creek that includes updated information about current and past water quality tests and violation information.

In addition to the reasons I just discussed, the Draft Permits are inadequate because of their failure to consider climate change impacts. Section 316(a) of the Clean Water Act requires EPA to consider the change to the ambient water temperature in the Chelsea Creek because of an effluent discharge. Several of these facilities have boiler blow down from steam boilers, which would release more and more hot water into the creek. And that warming of the water needs to be considered in the climate change context. As water temperatures increase, water pollution problems will increase. As temperature increases, dissolved oxygen levels will be creating more complex environmental conditions which don't seem to be taken into consideration with these Draft Permits. Further, these permits are jointly issued by EPA and DEP as was said. And under General Laws of Massachusetts, Chapter 30, Section 61, in paragraph 2, DEP needs to make findings about reasonably foreseeable climate change impacts, which have not been done in the Draft Permits.

My next comments concern the Environmental Justice Assessment. While this particular Environmental Justice analysis is the most robust that I have seen out of Region 1, I think, more analyses are required. EPA recently developed a tool, CFERST, the Community Focused Exposure and Risk Screening Tool. That should be consulted to identify additional health information, such as cancer rates, particularly for cancers that are known to be associated with benzene exposure. There should be some analysis of whether health indicators in the study area and the larger host cities demonstrate health inequities, whether there are -- the health of one racial or ethnic group is different than other racial or ethnic groups, and how those compare to the statewide average. And there should also be an analysis of water exposure and how contact with the contaminated water could affect human health.

Further, EPA concludes in its assessment that, because the effluent limits in the Draft Permits will ensure that the facilities do not contribute to water violations, this permitting action with therefore not disproportionately affect human health or the environment. This seems to be quite conclusory and it doesn't discuss how the effluent limits will improve water quality or remedy the past injustice of the environmental contamination. EPA should consider whether to require that signs be placed at the various access points to the creek. There are a few. But, whether those should be placed, and discuss the water impairments to the creek. Those signs should be available in multiple languages.

In conclusion, the communities that abut the facilities on the Chelsea Creek face not only an Environmental Justice burden, but a pollution burden of historical proportions. These permits must acknowledge this reality and incorporate the suggested changes so that conditions in the

Chelsea Creek improve and contribute to environmental justice in Chelsea, East Boston and Revere.

Response to Comment I1:

See Response to Comment C6, as the comments are substantially identical. See also Responses to Comments C1 and C5 in Part I.

Comments submitted by Roseann Bongiovanni, Associate Executive Director, Chelsea Collaborative:

Comment J1:

Good evening. My name is Roseann Bongiovanni. I'm a Chelsea resident and I'm also the Assistant Director of the Chelsea Collaborative, which represents the Chelsea side of the Chelsea Creek Action Group. Thank you to the EPA and the DEP for being here this evening in Chelsea, and for making this presentation and for providing interpretation services for our community.

I also would like to thank the EPA for conducting an Environmental Justice analysis in correlation to these NPDES permits. In going through the EJ analysis, I had a comment that stood out to me. I was looking at the compliance and inspection history. Global Petroleum terminal had four violations. And yet, there are only two federal Clean Water Act inspections. Global REVCO terminal had three violations. And yet, there are only two Clean Water Act inspections from the federal government. Irving had five violations. And there are only three federal inspections. Similarly, Chelsea Sandwich had two violations and only two inspections. And four violations for the Gulf Oil terminal and only one inspection. And all of these inspections happened over a five year time frame. So, in the course of five years, each of these facilities, the maximum time that they got inspected was four. So, less than once per year. And that was for Sunoco that actually had no violations. It's startling to me how few inspections from the EPA there are on these facilities. There are seven facilities. As you've heard from so many members of this body and others, these communities surrounding the facilities are Environmental Justice communities. And we need more regular inspections of these facilities. We're relying on the industries to tell us when they're in violation of their own permits. So, we're essentially trusting the word of the companies, and yet, not doing any enforcement, taking any enforcement actions, or following up with any inspections. I implore you, in these NPDES permits, to require more frequent inspections by the EPA, at a very minimum of twice per year of each of these terminal facilities. And I would encourage you to do those inspections on an unannounced visit rather than letting them know well in advance so that they can prepare adequately.

Further, I've learned from other communities in the nearby area that, when there have been violations of federal or state permits, the community has advocated that those companies in violation of their permits pay for consultants so that community groups, like the Chelsea Creek Action Group, could be better informed of what those violations mean and how those results are interpreted to the community. So, I would implore you to include those on these NPDES permits. That any time one of these industries is in violation of their permit that they either, one, pay

towards a community enhancement or improvement project. Or two, that they provide for a consultant to translate these results to the community at large.

Similar to City Council President Frank, I want to encourage you to look at these permits, and as Madeline said as well, in a cumulative effect. You know, as we've heard, we're looking at each one of these permits in a silo, as if only -- as if there was only one terminal along the creek. There are seven terminals, seven terminals discharging pollutants all the time into the Chelsea Creek. And the only way that we can improve the Chelsea Creek is to have these permits be more and more stringent. The last time we issued these permits was in 2005. While there have been some changes and improvements made on these permits that you have shown as the Draft, we still feel like they're not stringent enough. They need to be far more stringent. We've gone almost 10 years. A lot has happened in 10 years. And these permits should reflect that. In 10 years' time, we want to be here saying that the Chelsea Creek is far cleaner than it was in 2014. And with the permits the way they are right now, we don't see that happening. The Chelsea Creek Action Group with the Mystic River Watershed Association and other organizations have been working very, very hard to improve the water quality of the Chelsea Creek, to reduce stormwater runoff, to reduce pollutants, to work with companies to be more accountable. And the only way we can deal with this holistically is if the EPA and DEP were to come down harder on these industries that are lining our waterfront.

Again, I want to thank you for coming here this evening. And I hope that, as you go back and review this data that, again, you think about Environmental Justice and this being an Environmental Justice -- all of these communities that are on the creek, being Environmental Justice communities, and that you take this opportunity as a significant step forward to say that Environmental Justice is important and that we want to do the right thing to make these permits even more stringent.

Thank you.

Response to Comment J1:

EPA acknowledges the portion of the comment regarding the EJA. See Response to Comment J1 in Part I for the full comment and response.

ATTACHMENT 1

Summary of Changes in the Final Permit

Chelsea Sandwich Terminal:

1. Corrections
   Correction: Several typographical corrections were made to the final permit that include adjustment in line spacing, adjustment in sentence spacing, adjustment in numbering, adjustment in format, and correction of grammar, punctuation, capitalization or spelling errors. No further rationale is warranted.

   Correction: Several permit conditions included in the final permit may appear in footnotes and/or parts that differ from the footnote and/or part in which the permit condition was proposed in the draft permit. No further rationale is warranted.

   Correction: Several adjustments to grammar or word phrasing were made to the final permit which do not add any new permit condition. Any permit condition included in the final permit to which adjustments were made for this reason remains substantially similar to the permit condition as proposed in the draft permit. No further rationale is warranted.

   Correction: The addresses provided in Part I.F.1.b.iii. for MassDEP's Northeast Regional Office and Part I.F.1.b.iv. for MassDEP's Worcester Office have been corrected.

2. Cover Page
   Deletion: The permit effective date sentence which stated, "If no comments are received, this permit shall become effective upon signature," has been removed, as public comments were received.

   Change: The permit page number count was changed as a result of changes between the draft and final permits.

   Deletion: The "draft" watermark and header were removed.

3. Part I.A.
   Change: The sample type required for Flow Rate in Part I.A.1. and Part I.A.2. has been changed to "estimate". The corresponding footnote in both parts (footnote 4) has been updated to reflect this change.

   Change: The sample type required for Number of Events in Part I.A.1. has been changed to "Count".

   Change: The measurement frequency for Pollutant Scan, Effluent in Part I.A.1. has been changed to quarterly for the first three years following the effective date of the permit and a minimum of 12 samples to be completed during April. The frequency is specified as once per year thereafter, with the possibility of elimination for certain parameters. The corresponding footnote (footnote 11) has been updated to reflect this change.

Change: The measurement frequency for Pollutant Scan, Receiving Water in Part I.A.1. has been changed to quarterly for the first three years following the effective date of the permit and a minimum of 12 samples to be completed during April. The frequency is specified as once per year thereafter. The corresponding footnote (footnote 12) has been updated to reflect this change.

Change: The measurement frequency for Whole Effluent Toxicity in Part I.A.1. has been changed to quarterly for the first three years following the effective date of the permit and a minimum of 12 samples. The frequency is specified as once per year thereafter, with the possibility of elimination. The corresponding footnote (footnote 13) has been updated to reflect this change.

Change: The measurement frequency for Whole Effluent Toxicity Test, Receiving Water Chemical Analysis in Part I.A.1 has been changed to quarterly for the first three years following the effective date of the permit and a minimum of 12 samples. The frequency is specified as once per year thereafter, with the possibility of elimination in footnote 13.

Change: The reporting units for any total recoverable metal parameter in Part I.A.1. that was specified as mg/L in the draft permit has been changed to µg/L in the final permit.

Addition: Footnote 1 in Part I.A.1. has been modified to contain a requirement that sampling occur during the first qualifying event for each required monitoring frequency. A definition of a qualifying event has also been added.

Change: The requirement included in footnote 2 in Part I.A.1. in the instance no discharge occurs during a measurement frequency has been changed to state, “If no discharge occurs during the measurement frequencies defined above…” to be consistent with the terminology used in the Effluent Limitations and Monitoring Requirements table.

Addition: A definition of practical quantitation limit has been added to footnote 3 in Part I.A.1.

Addition: The requirement in footnote 5 in Part I.A.1. and Part I.A.2. that Total Flow be measured by a totalizer or similar device has been clarified including an additional 180 days to meet the requirement and the option to report Total Flow as an estimate until the required totalizer or similar device is operational.

Addition: Footnote 7 in Part I.A.1. has added a provision for collection of rainwater samples in conjunction with pH sampling. Footnote 7 in Part I.A.2. has been modified to exclude this provision.

Deletion: The reference to reporting sample results below the minimum level for the parameters included in footnote 8 and 9 in Part I.A.1. has been removed, as requirements for reporting results below the practical quantitation limit are already specified in footnote 3.

Deletion: The reference to the minimum level for the pollutant vinyl chloride has been removed from footnote 11 in Part I.A.1., as monitoring for this parameter is not required.

Addition: The Measurement Frequency and Sample Type for Part I.A.2. Sum of Group I PAHs was inadvertently omitted. These have been specified as monthly, and grab, respectively.

Change: The permit condition in Part I.A.11. has been revised to state: "The Permittee shall not *discharge* any toxic pollutant or material including, but not limited to…" (emphasis added to the change). The provision in Part I.17.c., which contains the phrase regarding "use or manufacture" deleted from this condition, remains.

Change: The permit condition in Part I.A.16.b. for sampling of hydrostatic test water has been modified to require a minimum of three effluent samples at a specified point in the duration of the discharge. The influent sample requirement has been modified to remove requirements where municipal water supply is used as the fill source. The permit condition in Part I.A.16.c. clarifies that influent samples, when required, are to be analyzed for the parameters indicated.

4. Part I.B.
   Addition: The title for Part I.B. has been modified to note that additional allowable discharges as well as unauthorized discharges are contained within this part.

   Change: The prohibition of the discharge of additives, including, but not limited to: glutaraldehyde, ethylene glycol, butoxyethanol, alkylacrelate nitrito styrene polymer, coco alkylamine, 1,2,3 and 4-trimethylbenzene, 1,3,5-trimethylbenzene and methyl isobutyl ketone, has been moved from Part I.A.16. to Part I.B.3.e.

5. Part I.C.
   Change: The title for Part I.C. has been changed to Non-numeric Technology-based Effluent Limitations and Additional Requirements. All provisions formerly included in Part I.C. which pertain to the required Stormwater Pollution Prevention Plan are no longer included in Part I.C. See Part I.D., below.

   Addition: The terminology included in Part I.C.1. has been adjusted for consistency with the remainder of the control measure requirements.

   Addition: The control measures included in Part I.C.1.b-f. in the draft permit and by reference are now included in Part I.C.2. of the final permit. Control measure requirements included in the draft permit have been retained with limited typographical adjustment.

   Change: The phrase "permittee shall implement" has replaced "SWPPP must include" for the discharge practices best management practice, the spill control best management practice, and the stormwater system best management practice included in the draft

permit in Part I.C.1.d-f. to align with the content changes to Part I.C. and Part I.D. These best management practices are included in the final permit at Part I.C.3-5.

Addition: The discharge practices best management practice includes additional terminology consistent with the definition of a qualifying event added to footnote 1 in Part I.A.1. and voluntary sample coordination with other bulk petroleum storage facilities that discharge to the Chelsea River.

Change: The inspection requirements included under SWPPP requirements in Part I.C.1.g. of the draft permit have been moved to Part I.C.6. in the final permit with limited typographical adjustment which states, “the Permittee shall conduct facility inspections”.

Addition: The control measure requirements abbreviated in Part I.C.1.h-j. of the draft permit and included by reference have been moved to Part I.C.7. of the final permit and expanded to include the referenced provisions.

6. Part I.D.
   Addition: The terminology included in Part I.D.1-7. has been adjusted for consistency with the remainder of the SWPPP requirements and to clarify the referenced Multi-Sector General Permit, where needed.

   Addition: Part I.D.2. has added the requirement that the permittee posts, if practicable, a copy of the facility’s stormwater pollution prevention plan in portable document format to the permittee’s publicly accessible website and provide the direct hyperlink to its location.

   Addition: A cross-reference to the corrective action requirements included in Part I.C.7. has been added to Part I.D.4.

   Addition: The minimum documentation requirements included in the draft permit by reference for control measures (including BMPs), inspections, and corrective action have been added to Part I.D.5. of the final permit, where not already included in the draft permit.

7. Part I.F.
   Addition: Part I.F.1.a.ii. has added the requirement that the permittee posts, if practicable, a copy of the facility’s discharge monitoring report data in portable document format to the permittee’s publicly accessible website and provide the direct hyperlink to its location.

Summary of Changes in the Final Permit

Global REVCO Terminal:

1. Corrections
   Correction: Several typographical corrections were made to the final permit that include adjustment in line spacing, adjustment in sentence spacing, adjustment in numbering, adjustment in format, and correction of grammar, punctuation, capitalization or spelling errors. No further rationale is warranted.

   Correction: Several permit conditions included in the final permit may appear in footnotes and/or parts that differ from the footnote and/or part in which the permit condition was proposed in the draft permit. No further rationale is warranted.

   Correction: Several adjustments to grammar or word phrasing were made to the final permit which do not add any new permit condition. Any permit condition included in the final permit to which adjustments were made for this reason remains substantially similar to the permit condition as proposed in the draft permit. No further rationale is warranted.

   Correction: The addresses provided in Part I.F.1.b.iii. for MassDEP's Northeast Regional Office and Part I.F.1.b.iv. for MassDEP's Worcester Office have been corrected.

2. Cover Page
   Deletion: The permit effective date sentence which stated, "If no comments are received, this permit shall become effective upon signature," has been removed, as public comments were received.

   Change: The permit page number count was changed as a result of changes between the draft and final permits.

   Deletion: The "draft" watermark and header were removed.

3. Part I.A.
   Addition: Part I.A.1. has been revised to allow discharges of untreated stormwater in addition to discharges of treated stormwater. The corresponding footnotes in Part I.A.1. (footnote 1 and 5) have been updated to reflect this change.

   Change: The sample type required for Flow Rate in Part I.A.1. and Part I.A.2. has been changed to "estimate". The corresponding footnote in both parts (footnote 4) has been updated to reflect this change.

   Change: The sample type required for Number of Events in Part I.A.1. and Part I.A.2. has been changed to "Count".

   Change: The measurement frequency for Pollutant Scan, Effluent in Part I.A.1. and Part I.A.2. has been changed to quarterly for the first three years following the effective date

of the permit and a minimum of 12 samples to be completed during April. The frequency is specified as once per year thereafter, with the possibility of elimination for certain parameters. The corresponding footnotes (footnote 11 and 12, respectively) have been updated to reflect this change.

Addition: Total recoverable iron has been added to the list of parameters required for Pollutant Scan, Effluent for Outfall 005 in Part I.A.2. The corresponding footnote (footnote 12) has been updated to reflect this change.

Change: The measurement frequency for Pollutant Scan, Receiving Water in Part I.A.1. and Part I.A.2. has been changed to quarterly for the first three years following the effective date of the permit and a minimum of 12 samples to be completed during April. The frequency is specified as once per year thereafter. The corresponding footnotes (footnote 12 and 13, respectively) have been updated to reflect this change.

Change: The measurement frequency for Whole Effluent Toxicity in Part I.A.1. and Part I.A.2. has been changed to quarterly for the first three years following the effective date of the permit and a minimum of 12 samples. The frequency is specified as once per year thereafter, with the possibility of elimination. The corresponding footnotes (footnote 13 and 14, respectively) have been updated to reflect this change.

Change: The measurement frequency for Whole Effluent Toxicity Test, Receiving Water Chemical Analysis in Part I.A.1 and Part I.A.2. has been changed to quarterly for the first three years following the effective date of the permit and a minimum of 12 samples. The frequency is specified as once per year thereafter, with the possibility of elimination in footnote 13 and 14, respectively.

Change: Receiving water samples required in Part I.A.2. for Sales Creek, in conjunction with Pollutant Scan, Receiving Water and Whole Effluent Toxicity Test, Receiving Water Chemical Analysis have been adjusted to include requirements in the event sample collection from Sales Creek is not feasible when sampling is required. This includes approval for the use of an alternate dilution water for the purposes of whole effluent toxicity testing. The corresponding footnotes (footnote 13, 16 and 17) have been updated to reflect this change.

Change: The reporting units for any total recoverable metal parameter in Part I.A.1. that was specified as mg/L in the draft permit has been changed to µg/L in the final permit.

Addition: Footnote 1 in Part I.A.1. has been modified to contain a requirement that sampling occur during the first qualifying event for each required monitoring frequency. A definition of a qualifying event has also been added.

Change: The requirement included in footnote 2 in Part I.A.1. and Part I.A.2. in the instance no discharge occurs during a measurement frequency has been changed to state, “If no discharge occurs during the measurement frequencies defined above…” to be

consistent with the terminology used in the Effluent Limitations and Monitoring Requirements table.

Addition: A definition of practical quantitation limit has been added to footnote 3 in Part I.A.1. and Part I.A.2.

Addition: The requirement in footnote 5 in Part I.A.1. and Part I.A.2. that Total Flow be measured by a totalizer or similar device has been clarified including an additional 180 days to meet the requirement and the option to report Total Flow as an estimate until the required totalizer or similar device is operational.

Addition: Footnote 7 in Part I.A.1. and Part I.A.2. has added a provision for collection of rainwater samples in conjunction with pH sampling.

Deletion: The reference to reporting sample results below the minimum level for the parameters included in footnote 8 and 9 in Part I.A.1. has been removed, as requirements for reporting results below the practical quantitation limit are already specified in footnote 3.

Change: The permit condition in Part I.A.11. has been revised to state: “The Permittee shall not *discharge* any toxic pollutant or material including, but not limited to…” (emphasis added to the change). The provision in Part I.17.c. contains the phrase regarding “use or manufacture”, which was deleted from Part I.A.11.

Change: The permit condition in Part I.A.16.b. for sampling of hydrostatic test water has been modified to require a minimum of three effluent samples at a specified point in the duration of the discharge. The influent sample requirement has been modified to remove requirements where municipal water supply is used as the fill source. The permit condition in Part I.A.16.c. clarifies that influent samples, when required, are to be analyzed for the parameters indicated.

4. Part I.B.
   Addition: The title for Part I.B. has been modified to note that additional allowable discharges as well as unauthorized discharges are contained within this part.

   Change: The prohibition of the discharge of additives, including, but not limited to: glutaraldehyde, ethylene glycol, butoxyethanol, alkylacrelate nitrito styrene polymer, coco alkylamine, 1,2,3 and 4-trimethylbenzene, 1,3,5-trimethylbenzene and methyl isobutyl ketone, has been moved from Part I.A.16. to Part I.B.3.d.

5. Part I.C.
   Change: The title for Part I.C. has been changed to Non-numeric Technology-based Effluent Limitations and Additional Requirements. All provisions formerly included in Part I.C. which pertain to the required Stormwater Pollution Prevention Plan are no longer included in Part I.C. See Part I.D., below.

Addition: The terminology included in Part I.C.1. has been adjusted for consistency with the remainder of the control measure requirements.

Addition: The control measures included in Part I.C.1.b-f. in the draft permit and by reference are now included in Part I.C.2 of the final permit. Control measure requirements included in the draft permit have been retained with limited typographical adjustment.

Change: The phrase “permittee shall implement” has replaced “SWPPP must include” for the discharge practices best management practice, the spill control best management practice, and the stormwater system best management practice included in the draft permit in Part I.C.1.d-f. to align with the content changes to Part I.C. and Part I.D. These best management practices are included in the final permit at Part I.C.3-5.

Addition: The discharge practices best management practice includes additional terminology consistent with the definition of a qualifying event added to footnote 1 in Part I.A.1. and voluntary sample coordination with other bulk petroleum storage facilities that discharge to the Chelsea River.

Change: The inspection requirements included under SWPPP requirements in Part I.C.1.g. of the draft permit have been moved to Part I.C.6. in the final permit with limited typographical adjustment which states, “the Permittee shall conduct facility inspections”.

Addition: The control measure requirements abbreviated in Part I.C.1.h-j. of the draft permit and included by reference have been moved to Part I.C.7. of the final permit and expanded to include the referenced provisions.

6. Part I.D.
   Addition: The terminology included in Part I.D.1-7. has been adjusted for consistency with the remainder of the SWPPP requirements and to clarify the referenced Multi-Sector General Permit, where needed.

   Addition: Part I.D.2. has added the requirement that the permittee posts, if practicable, a copy of the facility’s stormwater pollution prevention plan in portable document format to the permittee’s publicly accessible website and provide the direct hyperlink to its location.

   Addition: A cross-reference to the corrective action requirements included in Part I.C.7. has been added to Part I.D.4.

   Addition: The minimum documentation requirements included in the draft permit by reference for control measures (including BMPs), inspections, and corrective action have been added to Part I.D.5. of the final permit.

7. Part I.F.

Addition: Part I.F.1.a.ii. has added the requirement that the permittee posts, if practicable, a copy of the facility's discharge monitoring report data in portable document format to the permittee's publicly accessible website and provide the direct hyperlink to its location.

Summary of Changes in the Final Permit

Global Petroleum Terminal:

1. Corrections
   Correction: Several typographical corrections were made to the final permit that include adjustment in line spacing, adjustment in sentence spacing, adjustment in numbering, adjustment in format, and correction of grammar, punctuation, capitalization or spelling errors. No further rationale is warranted.

   Correction: Several permit conditions included in the final permit may appear in footnotes and/or parts that differ from the footnote and/or part in which the permit condition was proposed in the draft permit. No further rationale is warranted.

   Correction: Several adjustments to grammar or word phrasing were made to the final permit which do not add any new permit condition. Any permit condition included in the final permit to which adjustments were made for this reason remains substantially similar to the permit condition as proposed in the draft permit. No further rationale is warranted.

   Correction: The addresses provided in Part I.G.1.b.iii. for MassDEP's Northeast Regional Office and Part I.G.1.b.iv. for MassDEP's Worcester Office have been corrected.

2. Cover Page
   Deletion: The permit effective date sentence which stated, "If no comments are received, this permit shall become effective upon signature," has been removed, as public comments were received.

   Change: The permit page number count was changed as a result of changes between the draft and final permits.

   Deletion: The "draft" watermark and header were removed.

3. Part I.A.
   Change: The sample type required for Flow Rate in Part I.A.1., Part I.A.2., and Part I.A.3. has been changed to "estimate". The corresponding footnote (footnote 4) has been updated to reflect this change.

   Change: The sample type required for Number of Events in Part I.A.1. has been changed to "Count".

   Change: The measurement frequency for Pollutant Scan, Effluent in Part I.A.1. has been changed to quarterly for the first three years following the effective date of the permit and a minimum of 12 samples to be completed during April. The frequency is specified as once per year thereafter, with the possibility of elimination for certain parameters. The corresponding footnote (footnote 12) has been updated to reflect this change.

Change: The measurement frequency for Pollutant Scan, Receiving Water in Part I.A.1. has been changed to quarterly for the first three years following the effective date of the permit and a minimum of 12 samples to be completed during April. The frequency is specified as once per year thereafter. The corresponding footnote (footnote 13) has been updated to reflect this change.

Change: The measurement frequency for Whole Effluent Toxicity in Part I.A.1. has been changed to quarterly for the first three years following the effective date of the permit and a minimum of 12 samples. The frequency is specified as once per year thereafter, with the possibility of elimination. The corresponding footnote (footnote 14) has been updated to reflect this change.

Change: The measurement frequency for Whole Effluent Toxicity Test, Receiving Water Chemical Analysis in Part I.A.1 has been changed to quarterly for the first three years following the effective date of the permit and a minimum of 12 samples. The frequency is specified as once per year thereafter, with the possibility of elimination in footnote 14.

Change: The reporting units for any total recoverable metal parameter in Part I.A.1. that was specified as mg/L in the draft permit has been changed to µg/L in the final permit.

Addition: Part I.A.3. has been revised to allow discharges of treated stormwater in addition to discharges of treated groundwater. This change is also referenced in Part I.A.1. and has been added to the SWPPP requirements in Part I.D.1.

Addition: Footnote 1 in Part I.A.1. has been modified to contain a requirement that sampling occur during the first qualifying event for each required monitoring frequency. A definition of a qualifying event has also been added.

Change: The requirement included in footnote 2 in Part I.A.1. in the instance no discharge occurs during a measurement frequency has been changed to state, “If no discharge occurs during the measurement frequencies defined above…” to be consistent with the terminology used in the Effluent Limitations and Monitoring Requirements table.

Addition: A definition of practical quantitation limit has been added to footnote 3 in Part I.A.1.

Addition: The requirement in footnote 5 in Part I.A.1., Part I.A.2., and Part I.A.3. that Total Flow be measured by a totalizer or similar device has been clarified including an additional 180 days to meet the requirement and the option to report Total Flow as an estimate until the required totalizer or similar device is operational.

Addition: Footnote 7 in Part I.A.1. has added a provision for collection of rainwater samples in conjunction with pH sampling.

Deletion: The reference to reporting sample results below the minimum level for the parameters included in footnote 8 and 9 in Part I.A.1. has been removed, as requirements for reporting results below the practical quantitation limit are already specified in footnote 3.

Change: The permit condition in Part I.A.12. has been revised to state: "The Permittee shall not *discharge* any toxic pollutant or material including, but not limited to…" (emphasis added to the change). The provision in Part I.A.18.c. contains the phrase regarding "use or manufacture", which was deleted from Part I.A.12.

Change: The permit condition in Part I.A.17.b. for sampling of hydrostatic test water has been modified to require a minimum of three effluent samples at a specified point in the duration of the discharge. The influent sample requirement has been modified to remove requirements where municipal water supply is used as the fill source. The permit condition in Part I.A.17.c. clarifies that influent samples, when required, are to be analyzed for the parameters indicated. Total recoverable chromium has been added to the list of parameters required.

4. Part I.B.
   Addition: The title for Part I.B. has been modified to note that additional allowable discharges as well as unauthorized discharges are contained within this part.

   Change: The prohibition of the discharge of additives, including, but not limited to: glutaraldehyde, ethylene glycol, butoxyethanol, alkylacrelate nitrito styrene polymer, coco alkylamine, 1,2,3 and 4-trimethylbenzene, 1,3,5-trimethylbenzene and methyl isobutyl ketone, has been moved from Part I.A.17. to Part I.B.3.c.

5. Part I.C.
   Change: The title for Part I.C. has been changed to Non-numeric Technology-based Effluent Limitations and Additional Requirements. All provisions formerly included in Part I.C. which pertain to the required Stormwater Pollution Prevention Plan are no longer included in Part I.C. See Part I.D., below.

   Addition: The terminology included in Part I.C.1. has been adjusted for consistency with the remainder of the control measure requirements.

   Addition: The control measures included in Part I.C.1.b-f. in the draft permit and by reference are now included in Part I.C.2. of the final permit. Control measure requirements included in the draft permit have been retained with limited typographical adjustment.

   Change: The phrase "permittee shall implement" has replaced "SWPPP must include" for the discharge practices best management practice, the spill control best management practice, and the stormwater system best management practice included in the draft permit in Part I.C.1.d-f. to align with the content changes to Part I.C. and Part I.D. These best management practices are included in the final permit at Part I.C.3-5.

Addition: The discharge practices best management practice includes additional terminology consistent with the definition of a qualifying event added to footnote 1 in Part I.A.1. and voluntary sample coordination with other bulk petroleum storage facilities that discharge to the Chelsea River.

Change: The inspection requirements included under SWPPP requirements in Part I.C.1.g. of the draft permit have been moved to Part I.C.6. in the final permit with limited typographical adjustment which states, “the Permittee shall conduct facility inspections”.

Addition: The control measure requirements abbreviated in Part I.C.1.h-j. of the draft permit and included by reference have been moved to Part I.C.7. of the final permit and expanded to include the referenced provisions.

6. Part I.D.
   Addition: The terminology included in Part I.D.1-7. has been adjusted for consistency with the remainder of the SWPPP requirements and to clarify the referenced Multi-Sector General Permit, where needed.

   Addition: Part I.D.2. has added the requirement that the permittee posts, if practicable, a copy of the facility’s stormwater pollution prevention plan in portable document format to the permittee’s publicly accessible website and provide the direct hyperlink to its location.

   Addition: A cross-reference to the corrective action requirements included in Part I.C.7. has been added to Part I.D.4.

   Addition: The minimum documentation requirements included in the draft permit by reference for control measures (including BMPs), inspections, and corrective action have been added to Part I.D.5. of the final permit.

7. Part I.G.
   Addition: Part I.G.1.a.ii. has added the requirement that the permittee posts, if practicable, a copy of the facility’s discharge monitoring report data in portable document format to the permittee’s publicly accessible website and provide the direct hyperlink to its location.

Summary of Changes in the Final Permit

Global South Terminal:

1. Corrections
   Correction: Several typographical corrections were made to the final permit that include adjustment in line spacing, adjustment in sentence spacing, adjustment in numbering, adjustment in format, and correction of grammar, punctuation, capitalization or spelling errors. No further rationale is warranted.

   Correction: Several permit conditions included in the final permit may appear in footnotes and/or parts that differ from the footnote and/or part in which the permit condition was proposed in the draft permit. No further rationale is warranted.

   Correction: Several adjustments to grammar or word phrasing were made to the final permit which do not add any new permit condition. Any permit condition included in the final permit to which adjustments were made for this reason remains substantially similar to the permit condition as proposed in the draft permit. No further rationale is warranted.

   Correction: The addresses provided in Part I.G.1.b.iii. for MassDEP's Northeast Regional Office and Part I.G.1.b.iv. for MassDEP's Worcester Office have been corrected.

2. Cover Page
   Deletion: The permit effective date sentence which stated, "If no comments are received, this permit shall become effective upon signature," has been removed, as public comments were received.

   Change: The permit page number count was changed as a result of changes between the draft and final permits.

   Deletion: The "draft" watermark and header were removed.

3. Part I.A.
   Change: The sample type required for Flow Rate in Part I.A.1. has been changed to "estimate". The corresponding footnote (footnote 4) has been updated to reflect this change.

   Change: The sample type required for Number of Events in Part I.A.1. has been changed to "Count".

   Change: The measurement frequency for Pollutant Scan, Effluent in Part I.A.1. has been changed to quarterly for the first three years following the effective date of the permit and a minimum of 12 samples to be completed during April. The frequency is specified as once per year thereafter, with the possibility of elimination for certain parameters. The corresponding footnote (footnote 12) has been updated to reflect this change.

Addition: Total recoverable iron has been added to the list of parameters required for Pollutant Scan, Effluent for Outfall 001 in Part I.A.1. The corresponding footnote (footnote 12) has been updated to reflect this change.

Change: The measurement frequency for Pollutant Scan, Receiving Water in Part I.A.1. has been changed to quarterly for the first three years following the effective date of the permit and a minimum of 12 samples to be completed during April. The frequency is specified as once per year thereafter. The corresponding footnote (footnote 13) has been updated to reflect this change.

Change: The measurement frequency for Whole Effluent Toxicity in Part I.A.1. has been changed to quarterly for the first three years following the effective date of the permit and a minimum of 12 samples. The frequency is specified as once per year thereafter, with the possibility of elimination. The corresponding footnote (footnote 14) has been updated to reflect this change.

Change: The measurement frequency for Whole Effluent Toxicity Test, Receiving Water Chemical Analysis in Part I.A.1. has been changed to quarterly for the first three years following the effective date of the permit and a minimum of 12 samples. The frequency is specified as once per year thereafter, with the possibility of elimination in footnote 14.

Change: The reporting units for any total recoverable metal parameter in Part I.A.1. that was specified as mg/L in the draft permit has been changed to µg/L in the final permit.

Addition: Footnote 1 in Part I.A.1. has been modified to contain a requirement that sampling occur during the first qualifying event for each required monitoring frequency. A definition of a qualifying event has also been added.

Change: The requirement included in footnote 2 in Part I.A.1. in the instance no discharge occurs during a measurement frequency has been changed to state, “If no discharge occurs during the measurement frequencies defined above…” to be consistent with the terminology used in the Effluent Limitations and Monitoring Requirements table.

Addition: A definition of practical quantitation limit has been added to footnote 3 in Part I.A.1.

Addition: The requirement in footnote 5 in Part I.A.1. that Total Flow be measured by a totalizer or similar device has been clarified including an additional 180 days to meet the requirement and the option to report Total Flow as an estimate until the required totalizer or similar device is operational.

Addition: Footnote 7 in Part I.A.1. has added a provision for collection of rainwater samples in conjunction with pH sampling.

Deletion: The reference to reporting sample results below the minimum level for the parameters included in footnote 8 and 9 in Part I.A.1. has been removed, as requirements for reporting results below the practical quantitation limit are already specified in footnote 3.

Change: The permit condition in Part I.A.10. has been revised to state: "The Permittee shall not *discharge* any toxic pollutant or material including, but not limited to…" (emphasis added to the change). The provision in Part I.A.16.c. contains the phrase regarding "use or manufacture", which was deleted from Part I.A.10.

Change: The permit condition in Part I.A.15.b. for sampling of hydrostatic test water has been modified to require a minimum of three effluent samples at a specified point in the duration of the discharge. The influent sample requirement has been modified to remove requirements where municipal water supply is used as the fill source. The permit condition in Part I.A.15.c. clarifies that influent samples, when required, are to be analyzed for the parameters indicated.

4. Part I.B.
   Addition: The title for Part I.B. has been modified to note that additional allowable discharges as well as unauthorized discharges are contained within this part.

   Change: The prohibition of the discharge of additives, including, but not limited to: glutaraldehyde, ethylene glycol, butoxyethanol, alkylacrelate nitrito styrene polymer, coco alkylamine, 1,2,3 and 4-trimethylbenzene, 1,3,5-trimethylbenzene and methyl isobutyl ketone, has been moved from Part I.A.15. to Part I.B.3.d.

5. Part I.C.
   Change: The title for Part I.C. has been changed to Non-numeric Technology-based Effluent Limitations and Additional Requirements. All provisions formerly included in Part I.C. which pertain to the required Stormwater Pollution Prevention Plan are no longer included in Part I.C. See Part I.D., below.

   Addition: The terminology included in Part I.C.1. has been adjusted for consistency with the remainder of the control measure requirements.

   Addition: The control measures included in Part I.C.1.b-f. in the draft permit and by reference are now included in Part I.C.2. of the final permit. Control measure requirements included in the draft permit have been retained with limited typographical adjustment.

   Change: The phrase "permittee shall implement" has replaced "SWPPP must include" for the discharge practices best management practice, the spill control best management practice, and the stormwater system best management practice included in the draft permit in Part I.C.1.d-f. to align with the content changes to Part I.C. and Part I.D. These best management practices are included in the final permit at Part I.C.3-5.

Addition: The discharge practices best management practice includes additional terminology consistent with the definition of a qualifying event added to footnote 1 in Part I.A.1. and voluntary sample coordination with other bulk petroleum storage facilities that discharge to the Chelsea River.

Change: The inspection requirements included under SWPPP requirements in Part I.C.1.g. of the draft permit have been moved to Part I.C.6. in the final permit with limited typographical adjustment which states, “the Permittee shall conduct facility inspections”.

Addition: The control measure requirements abbreviated in Part I.C.1.h-j. of the draft permit and included by reference have been moved to Part I.C.7. of the final permit and expanded to include the referenced provisions.

6. Part I.D.
   Addition: The terminology included in Part I.D.1-7. has been adjusted for consistency with the remainder of the SWPPP requirements and to clarify the referenced Multi-Sector General Permit, where needed.

   Addition: Part I.D.2. has added the requirement that the permittee posts, if practicable, a copy of the facility’s stormwater pollution prevention plan in portable document format to the permittee’s publicly accessible website and provide the direct hyperlink to its location.

   Addition: A cross-reference to the corrective action requirements included in Part I.C.7. has been added to Part I.D.4.

   Addition: The minimum documentation requirements included in the draft permit by reference for control measures (including BMPs), inspections, and corrective action have been added to Part I.D.5. of the final permit.

7. Part I.G.
   Addition: Part I.G.1.a.ii. has added the requirement that the permittee posts, if practicable, a copy of the facility’s discharge monitoring report data in portable document format to the permittee’s publicly accessible website and provide the direct hyperlink to its location.

Summary of Changes in the Final Permit

Gulf Oil Terminal:

1. Corrections
   Correction: Several typographical corrections were made to the final permit that include adjustment in line spacing, adjustment in sentence spacing, adjustment in numbering, adjustment in format, and correction of grammar, punctuation, capitalization or spelling errors. No further rationale is warranted.

   Correction: Several permit conditions included in the final permit may appear in footnotes and/or parts that differ from the footnote and/or part in which the permit condition was proposed in the draft permit. No further rationale is warranted.

   Correction: Several adjustments to grammar or word phrasing were made to the final permit which do not add any new permit condition. Any permit condition included in the final permit to which adjustments were made for this reason remains substantially similar to the permit condition as proposed in the draft permit. No further rationale is warranted.

   Correction: The addresses provided in Part I.F.1.b.iii. for MassDEP's Boston Office, Part I.F.1.c. for MassDEP's Northeast Regional Office, and Part I.F.1.b.iv. for MassDEP's Worcester Office have been corrected.

2. Cover Page
   Deletion: The permit effective date sentence which stated, "If no comments are received, this permit shall become effective upon signature," has been removed, as public comments were received.

   Change: The permit page number count was changed as a result of changes between the draft and final permits.

   Deletion: The "draft" watermark and header were removed.

3. Part I.A.
   Change: The sample type required for Flow Rate in Part I.A.1. has been changed to "estimate". The corresponding footnote (footnote 4) has been updated to reflect this change.

   Change: The sample type required for Number of Events in Part I.A.1. has been changed to "Count".

   Deletion: The average monthly numeric effluent limitation for methyl tert-butyl ether has been removed. The final permit requires monitoring, without limits.

   Change: The measurement frequency for Pollutant Scan, Effluent in Part I.A.1. has been changed to quarterly for the first three years following the effective date of the permit and

a minimum of 12 samples to be completed during April. The frequency is specified as once per year thereafter, with the possibility of elimination for certain parameters. The corresponding footnote (footnote 12) has been updated to reflect this change.

Change: The measurement frequency for Pollutant Scan, Receiving Water in Part I.A.1. has been changed to quarterly for the first three years following the effective date of the permit and a minimum of 12 samples to be completed during April. The frequency is specified as once per year thereafter. The corresponding footnote (footnote 13) has been updated to reflect this change.

Change: The measurement frequency for Whole Effluent Toxicity in Part I.A.1. has been changed to quarterly for the first three years following the effective date of the permit and a minimum of 12 samples. The frequency is specified as once per year thereafter, with the possibility of elimination. The corresponding footnote (footnote 14) has been updated to reflect this change.

Change: The measurement frequency for Whole Effluent Toxicity Test, Receiving Water Chemical Analysis in Part I.A.1 has been changed to quarterly for the first three years following the effective date of the permit and a minimum of 12 samples. The frequency is specified as once per year thereafter, with the possibility of elimination in footnote 14.

Change: The reporting units for any total recoverable metal parameter in Part I.A.1. that was specified as mg/L in the draft permit has been changed to µg/L in the final permit.

Addition: Footnote 1 in Part I.A.1. has been modified to contain a requirement that sampling occur during the first qualifying event for each required monitoring frequency. A definition of a qualifying event has also been added.

Change: The requirement included in footnote 2 in Part I.A.1. in the instance no discharge occurs during a measurement frequency has been changed to state, “If no discharge occurs during the measurement frequencies defined above…” to be consistent with the terminology used in the Effluent Limitations and Monitoring Requirements table.

Addition: A definition of practical quantitation limit has been added to footnote 3 in Part I.A.1.

Addition: The requirement in footnote 5 in Part I.A.1. that Total Flow be measured by a totalizer or similar device has been clarified including an additional 180 days to meet the requirement and the option to report Total Flow as an estimate until the required totalizer or similar device is operational.

Addition: Footnote 7 in Part I.A.1. has added a provision for collection of rainwater samples in conjunction with pH sampling.

Deletion: The reference to reporting sample results below the minimum level for the parameters included in footnote 8 and 9 in Part I.A.1. has been removed, as requirements for reporting results below the practical quantitation limit are already specified in footnote 3 in Part I.A.1.

Change: The permit condition in Part I.A.10. has been revised to state: "The Permittee shall not *discharge* any toxic pollutant or material including, but not limited to…" (emphasis added to the change). The provision in Part I.A.16.c. contains the phrase regarding "use or manufacture", which was deleted from Part I.A.10.

Change: The permit condition in Part I.A.15.b. for sampling of hydrostatic test water has been modified to require a minimum of three effluent samples at a specified point in the duration of the discharge. The influent sample requirement has been modified to remove requirements where municipal water supply is used as the fill source. The permit condition in Part I.A.15.c. clarifies that influent samples, when required, are to be analyzed for the parameters indicated.

4. Part I.B.
   Addition: The title for Part I.B. has been modified to note that additional allowable discharges as well as unauthorized discharges are contained within this part.

   Change: The prohibition of the discharge of additives, including, but not limited to: glutaraldehyde, ethylene glycol, butoxyethanol, alkylacrelate nitrito styrene polymer, coco alkylamine, 1,2,3 and 4-trimethylbenzene, 1,3,5-trimethylbenzene and methyl isobutyl ketone, has been moved from Part I.A.15. to Part I.B.3.d.

5. Part I.C.
   Change: The title for Part I.C. has been changed to Non-numeric Technology-based Effluent Limitations and Additional Requirements. All provisions formerly included in Part I.C. which pertain to the required Stormwater Pollution Prevention Plan are no longer included in Part I.C. See Part I.D., below.

   Addition: The terminology included in Part I.C.1. has been adjusted for consistency with the remainder of the control measure requirements.

   Addition: The control measures included in Part I.C.1.b-f. in the draft permit and by reference are now included in Part I.C.2. of the final permit. Control measure requirements included in the draft permit have been retained with limited typographical adjustment.

   Change: The phrase "permittee shall implement" has replaced "SWPPP must include" for the discharge practices best management practice, the spill control best management practice, and the stormwater system best management practice included in the draft permit in Part I.C.1.d-f. to align with the content changes to Part I.C. and Part I.D. These best management practices are included in the final permit at Part I.C.3-5.

Addition: The discharge practices best management practice includes additional terminology consistent with the definition of a qualifying event added to footnote 1 in Part I.A.1. and voluntary sample coordination with other bulk petroleum storage facilities that discharge to the Chelsea River.

Change: The inspection requirements included under SWPPP requirements in Part I.C.1.g. of the draft permit have been moved to Part I.C.6. in the final permit with limited typographical adjustment which states, “the Permittee shall conduct facility inspections”.

Addition: The control measure requirements abbreviated in Part I.C.1.h-j. of the draft permit and included by reference have been moved to Part I.C.7. of the final permit and expanded to include the referenced provisions.

6. Part I.D.
   Addition: The terminology included in Part I.D.1-7. has been adjusted for consistency with the remainder of the SWPPP requirements and to clarify the referenced Multi-Sector General Permit, where needed.

   Addition: Part I.D.2. has added the requirement that the permittee posts, if practicable, a copy of the facility’s stormwater pollution prevention plan in portable document format to the permittee’s publicly accessible website and provide the direct hyperlink to its location.

   Addition: A cross-reference to the corrective action requirements included in Part I.C.7. has been added to Part I.D.4.

   Addition: The minimum documentation requirements included in the draft permit by reference for control measures (including BMPs), inspections, and corrective action have been added to Part I.D.5. of the final permit.

7. Part I.F.
   Change: The period of time the permittee has to begin use of NetDMR for reporting has been changed from one year to six months.

   Addition: Part I.F.1.a.iii. has added the requirement that the permittee posts, if practicable, a copy of the facility’s discharge monitoring report data in portable document format to the permittee’s publicly accessible website and provide the direct hyperlink to its location.

Summary of Changes in the Final Permit

Irving Oil Terminal:

1. Corrections
   Correction: Several typographical corrections were made to the final permit that include adjustment in line spacing, adjustment in sentence spacing, adjustment in numbering, adjustment in format, and correction of grammar, punctuation, capitalization or spelling errors. No further rationale is warranted.

   Correction: Several permit conditions included in the final permit may appear in footnotes and/or parts that differ from the footnote and/or part in which the permit condition was proposed in the draft permit. No further rationale is warranted.

   Correction: Several adjustments to grammar or word phrasing were made to the final permit which do not add any new permit condition. Any permit condition included in the final permit to which adjustments were made for this reason remains substantially similar to the permit condition as proposed in the draft permit. No further rationale is warranted.

   Correction: The addresses provided in Part I.F.1.b.iii. for MassDEP's Boston Office, Part I.F.1.c. for MassDEP's Northeast Regional Office have been corrected, and Part I.F.1.b.iv. for MassDEP's Worcester Office have been corrected..

2. Cover Page
   Deletion: The permit effective date sentence which stated, "If no comments are received, this permit shall become effective upon signature," has been removed, as public comments were received.

   Change: The permit page number count was changed as a result of changes between the draft and final permits.

   Deletion: The "draft" watermark and header were removed.

3. Part I.A.
   Change: The sample type required for Flow Rate in Part I.A.1. has been changed to "estimate". The corresponding footnote (footnote 4) has been updated to reflect this change.

   Change: The sample type required for Number of Events in Part I.A.1. has been changed to "Count".

   Change: The measurement frequency for Pollutant Scan, Effluent in Part I.A.1. has been changed to quarterly for the first three years following the effective date of the permit and a minimum of 12 samples to be completed during April. The frequency is specified as once per year thereafter, with the possibility of elimination for certain parameters. The corresponding footnote (footnote 12) has been updated to reflect this change.

Change: The measurement frequency for Pollutant Scan, Receiving Water in Part I.A.1. has been changed to quarterly for the first three years following the effective date of the permit and a minimum of 12 samples to be completed during April. The frequency is specified as once per year thereafter. The corresponding footnote (footnote 13) has been updated to reflect this change.

Change: The measurement frequency for Whole Effluent Toxicity in Part I.A.1. has been changed to quarterly for the first three years following the effective date of the permit and a minimum of 12 samples. The frequency is specified as once per year thereafter, with the possibility of elimination. The corresponding footnote (footnote 14) has been updated to reflect this change.

Change: The measurement frequency for Whole Effluent Toxicity Test, Receiving Water Chemical Analysis in Part I.A.1 has been changed to quarterly for the first three years following the effective date of the permit and a minimum of 12 samples. The frequency is specified as once per year thereafter, with the possibility of elimination in footnote 14.

Change: The reporting units for any total recoverable metal parameter in Part I.A.1. that was specified as mg/L in the draft permit has been changed to µg/L in the final permit.

Addition: Footnote 1 in Part I.A.1. has been modified to contain a requirement that sampling occur during the first qualifying event for each required monitoring frequency. A definition of a qualifying event has also been added.

Change: The requirement included in footnote 2 in Part I.A.1. in the instance no discharge occurs during a measurement frequency has been changed to state, “If no discharge occurs during the measurement frequencies defined above…” to be consistent with the terminology used in the Effluent Limitations and Monitoring Requirements table.

Addition: A definition of practical quantitation limit has been added to footnote 3 in Part I.A.1.

Addition: The requirement in footnote 5 in Part I.A.1. that Total Flow be measured by a totalizer or similar device has been clarified including an additional 180 days to meet the requirement and the option to report Total Flow as an estimate until the required totalizer or similar device is operational.

Addition: Footnote 7 in Part I.A.1. has added a provision for collection of rainwater samples in conjunction with pH sampling.

Deletion: The reference to reporting sample results below the minimum level for the parameters included in footnote 8 and 9 in Part I.A.1. has been removed, as requirements for reporting results below the practical quantitation limit are already specified in footnote 3 in Part I.A.1.

Change: The permit condition in Part I.A.10. has been revised to state: “The Permittee shall not *discharge* any toxic pollutant or material including, but not limited to…” (emphasis added to the change). The provision in Part I.A.16.c. contains the phrase regarding “use or manufacture”, which was deleted from Part I.A.10.

Change: The permit condition in Part I.A.15.b. for sampling of hydrostatic test water has been modified to require a minimum of three effluent samples at a specified point in the duration of the discharge. The influent sample requirement has been modified to remove requirements where municipal water supply is used as the fill source. The permit condition in Part I.A.15.c. clarifies that influent samples, when required, are to be analyzed for the parameters indicated. Total recoverable chromium has been added to the list of parameters required.

4. Part I.B.
   Addition: The title for Part I.B. has been modified to note that additional allowable discharges as well as unauthorized discharges are contained within this part.

   Change: The prohibition of the discharge of additives, including, but not limited to: glutaraldehyde, ethylene glycol, butoxyethanol, alkylacrelate nitrito styrene polymer, coco alkylamine, 1,2,3 and 4-trimethylbenzene, 1,3,5-trimethylbenzene and methyl isobutyl ketone, has been moved from Part I.A.15. to Part I.B.3.e.

5. Part I.C.
   Change: The title for Part I.C. has been changed to Non-numeric Technology-based Effluent Limitations and Additional Requirements. All provisions formerly included in Part I.C. which pertain to the required Stormwater Pollution Prevention Plan are no longer included in Part I.C. See Part I.D., below.

   Addition: The terminology included in Part I.C.1. has been adjusted for consistency with the remainder of the control measure requirements.

   Addition: The control measures included in Part I.C.1.b-f. in the draft permit and by reference are now included in Part I.C.2. of the final permit. Control measure requirements included in the draft permit have been retained with limited typographical adjustment.

   Change: The phrase “permittee shall implement” has replaced “SWPPP must include” for the discharge practices best management practice, the spill control best management practice, and the stormwater system best management practice included in the draft permit in Part I.C.1.d-f. to align with the content changes to Part I.C. and Part I.D. These best management practices are included in the final permit at Part I.C.3-5.

   Addition: The discharge practices best management practice includes additional terminology consistent with the definition of a qualifying event added to footnote 1 in

Part I.A.1. and voluntary sample coordination with other bulk petroleum storage facilities that discharge to the Chelsea River.

Change: The inspection requirements included under SWPPP requirements in Part I.C.1.g. of the draft permit have been moved to Part I.C.6. in the final permit with limited typographical adjustment which states, “the Permittee shall conduct facility inspections”.

Addition: The control measure requirements abbreviated in Part I.C.1.h-j. of the draft permit and included by reference have been moved to Part I.C.7. of the final permit and expanded to include the referenced provisions.

6. Part I.D.
   Addition: The terminology included in Part I.D.1-7. has been adjusted for consistency with the remainder of the SWPPP requirements and to clarify the referenced Multi-Sector General Permit, where needed.

   Addition: Part I.D.2. has added the requirement that the permittee posts, if practicable, a copy of the facility’s stormwater pollution prevention plan in portable document format to the permittee’s publicly accessible website and provide the direct hyperlink to its location.

   Addition: A cross-reference to the corrective action requirements included in Part I.C.7. has been added to Part I.D.4.

   Addition: The minimum documentation requirements included in the draft permit by reference for control measures (including BMPs), inspections, and corrective action have been added to Part I.D.5. of the final permit.

7. Part I.F.
   Change: The period of time the permittee has to begin use of NetDMR for reporting has been changed from one year to six months.

   Addition: Part I.F.1.a.iii. has added the requirement that the permittee posts, if practicable, a copy of the facility’s discharge monitoring report data in portable document format to the permittee’s publicly accessible website and provide the direct hyperlink to its location.

Summary of Changes in the Final Permit

Sunoco Logistics Terminal:

1. Corrections
   Correction: Several typographical corrections were made to the final permit that include adjustment in line spacing, adjustment in sentence spacing, adjustment in numbering, adjustment in format, and correction of grammar, punctuation, capitalization or spelling errors. No further rationale is warranted.

   Correction: Several permit conditions included in the final permit may appear in footnotes and/or parts that differ from the footnote and/or part in which the permit condition was proposed in the draft permit. No further rationale is warranted.

   Correction: Several adjustments to grammar or word phrasing were made to the final permit which do not add any new permit condition. Any permit condition included in the final permit to which adjustments were made for this reason remains substantially similar to the permit condition as proposed in the draft permit. No further rationale is warranted.

   Correction: The addresses provided in Part I.F.1.b.iii. for MassDEP's Boston Office, Part I.F.1.c. for MassDEP's Northeast Regional Office have been corrected, and Part I.F.1.b.iv. for MassDEP's Worcester Office have been corrected.

2. Cover Page
   Deletion: The permit effective date sentence which stated, "If no comments are received, this permit shall become effective upon signature," has been removed, as public comments were received.

   Change: The permit page number count was changed as a result of changes between the draft and final permits.

   Deletion: The "draft" watermark and header were removed.

3. Part I.A.
   Change: The sample type required for Flow Rate in Part I.A.1. and I.A.2. has been changed to "estimate". The corresponding footnote in both parts (footnote 4) has been updated to reflect this change.

   Change: The sample type required for Number of Events in Part I.A.1. has been changed to "Count".

   Change: The measurement frequency for Pollutant Scan, Effluent in Part I.A.1. has been changed to quarterly for the first three years following the effective date of the permit and a minimum of 12 samples to be completed during April. The frequency is specified as once per year thereafter, with the possibility of elimination for certain parameters. The corresponding footnote (footnote 13) has been updated to reflect this change.

Change: The measurement frequency for Pollutant Scan, Receiving Water in Part I.A.1. has been changed to quarterly for the first three years following the effective date of the permit and a minimum of 12 samples to be completed during April. The frequency is specified as once per year thereafter. The corresponding footnote (footnote 14) has been updated to reflect this change.

Change: The measurement frequency for Whole Effluent Toxicity in Part I.A.1. has been changed to quarterly for the first three years following the effective date of the permit and a minimum of 12 samples. The frequency is specified as once per year thereafter, with the possibility of elimination. The corresponding footnote (footnote 15) has been updated to reflect this change.

Change: The measurement frequency for Whole Effluent Toxicity Test, Receiving Water Chemical Analysis in Part I.A.1 has been changed to quarterly for the first three years following the effective date of the permit and a minimum of 12 samples. The frequency is specified as once per year thereafter, with the possibility of elimination in footnote 15.

Change: The reporting units for any total recoverable metal parameter in Part I.A.1. that was specified as mg/L in the draft permit has been changed to µg/L in the final permit.

Addition: Footnote 1 in Part I.A.1. has been modified to contain a requirement that sampling occur during the first qualifying event for each required monitoring frequency. A definition of a qualifying event has also been added.

Change: The requirement included in footnote 2 in Part I.A.1. in the instance no discharge occurs during a measurement frequency has been changed to state, “If no discharge occurs during the measurement frequencies defined above…” to be consistent with the terminology used in the Effluent Limitations and Monitoring Requirements table.

Addition: A definition of practical quantitation limit has been added to footnote 3 in Part I.A.1.

Addition: The requirement in footnote 5 in Part I.A.1. and Part I.A.2. that Total Flow be measured by a totalizer or similar device has been clarified including an additional 180 days to meet the requirement and the option to report Total Flow as an estimate until the required totalizer or similar device is operational.

Addition: Footnote 7 in Part I.A.1. has added a provision for collection of rainwater samples in conjunction with pH sampling. Footnote 7 in Part I.A.2. has been modified to exclude this provision.

Deletion: The reference to reporting sample results below the minimum level for the parameters included in footnote 8 and 9 in Part I.A.1. has been removed, as requirements

for reporting results below the practical quantitation limit are already specified in footnote 3.

Addition: The Measurement Frequency and Sample Type for Part I.A.2. Sum of Group I PAHs was inadvertently omitted. These have been specified as monthly, and grab, respectively.

Change: The permit condition in Part I.A.11. has been revised to state: "The Permittee shall not *discharge* any toxic pollutant or material including, but not limited to…" (emphasis added to the change). The provision in Part I.A.17.c. contains the phrase regarding "use or manufacture", which was deleted from Part I.A.11.

Change: The permit condition in Part I.A.16.b. for sampling of hydrostatic test water has been modified to require a minimum of three effluent samples at a specified point in the duration of the discharge. The influent sample requirement has been modified to remove requirements where municipal water supply is used as the fill source. The permit condition in Part I.A.16.c. clarifies that influent samples, when required, are to be analyzed for the parameters indicated. Total recoverable chromium has been added to the list of parameters required.

4. Part I.B.
   Addition: The title for Part I.B. has been modified to note that additional allowable discharges as well as unauthorized discharges are contained within this part.

   Change: The prohibition of the discharge of additives, including, but not limited to: glutaraldehyde, ethylene glycol, butoxyethanol, alkylacrelate nitrito styrene polymer, coco alkylamine, 1,2,3 and 4-trimethylbenzene, 1,3,5-trimethylbenzene and methyl isobutyl ketone, has been moved from Part I.A.16. to Part I.B.3.c.

5. Part I.C.
   Change: The title for Part I.C. has been changed to Non-numeric Technology-based Effluent Limitations and Additional Requirements. All provisions formerly included in Part I.C. which pertain to the required Stormwater Pollution Prevention Plan are no longer included in Part I.C. See Part I.D., below.

   Addition: The terminology included in Part I.C.1. has been adjusted for consistency with the remainder of the control measure requirements.

   Addition: The control measures included in Part I.C.1.b-f. in the draft permit and by reference are now included in Part I.C.2. of the final permit. Control measure requirements included in the draft permit have been retained with limited typographical adjustment.

   Change: The phrase "permittee shall implement" has replaced "SWPPP must include" for the discharge practices best management practice, the spill control best management practice, and the stormwater system best management practice included in the draft

permit in Part I.C.1.d-f. to align with the content changes to Part I.C. and Part I.D. These best management practices are included in the final permit at Part I.C.3-5.

Addition: The discharge practices best management practice includes additional terminology consistent with the definition of a qualifying event added to footnote 1 in Part I.A.1. and voluntary sample coordination with other bulk petroleum storage facilities that discharge to the Chelsea River.

Change: The inspection requirements included under SWPPP requirements in Part I.C.1.g. of the draft permit have been moved to Part I.C.6. in the final permits with limited typographical adjustment which states, “the Permittee shall conduct facility inspections”.

Addition: The control measure requirements abbreviated in Part I.C.1.h-j. of the draft permit and included by reference have been moved to Part I.C.7. of the final permit and expanded to include the referenced provisions.

6. Part I.D.
   Addition: The terminology included in Part I.D.1-7. has been adjusted for consistency with the remainder of the SWPPP requirements and to clarify the referenced Multi-Sector General Permit, where needed.

   Addition: Part I.D.2. has added the requirement that the permittee posts, if practicable, a copy of the facility’s stormwater pollution prevention plan in portable document format to the permittee’s publicly accessible website and provide the direct hyperlink to its location.

   Addition: A cross-reference to the corrective action requirements included in Part I.C.7. has been added to Part I.D.4.

   Addition: The minimum documentation requirements included in the draft permit by reference for control measures (including BMPs), inspections, and corrective action have been added to Part I.D.5. of the final permit.

7. Part I.F.
   Change: The period of time the permittee has to begin use of NetDMR for reporting has been changed from one year to six months.

   Addition: Part I.F.1.a.iii. has added the requirement that the permittee posts, if practicable, a copy of the facility’s discharge monitoring report data in portable document format to the permittee’s publicly accessible website and provide the direct hyperlink to its location.

APPENDIX 1

Updated EJ Analysis Sections IIIA, IIIB, and IIIC Incorporating a 1.0 Mile Buffer Around Chelsea River

IIIA. Social Demographics

EPA compiled demographic indicators pertinent to two different buffers around the Chelsea River as well as comparable indicators obtained for the entire state of Massachusetts using EPA's EJView database and the U.S. Census' American Community Survey 2006-2010.

These indicators include:

Demographic Indicator	**0.5 Mile Buffer Around Chelsea River**	**1.0 Mile Buffer Around Chelsea River**	**Massachusetts**
Population by Race			
White	59%	59%	81.7%
Black	5%	7%	6.5%
Asian	4%	5%	5.2%
Some other race	11%	10%	4.2%
Population Reporting Two or More Races	22%	18%	2.2%
Total Hispanic Population	54%	49%	9. 0%
Per Capita Income	$21,766	$22,210	$33,966
Non-English at Home	65%	37%	21%

Sources:
Study Areas: EJView ACS Summary Report. (see Figure 1A and Attachment A2).
State: US Census Bureau, American Community Survey 2006-2010. http://factfinder2.census.gov/faces/nav/jsf/pages/index.xhtml (Tables DP05, B19301, and DP02).

Overall the percent of the population residing within the 0.5 mile buffer around the Chelsea River that identifies itself as Hispanic in origin is about six-fold greater than that reported for the state as a whole and more than half of the individuals residing in the 0.5 mile buffer around the Chelsea River report speaking a language other than English in the home. In comparing demographic indicators for populations residing within in a one mile buffer around the Chelsea River, the percent of the population that identifies itself as Hispanic in origin is about five-fold greater than that reported for the state as a whole and about two-fifths of the individuals residing in the 1 mile buffer around Chelsea River report speaking a language other than English in the home. The per capita income reported for residents in either of the two buffer areas is about two thirds of the per capita income reported for all Massachusetts residents.

IIIB. Environment

EPA compiled readily available data on surface water quality and sites or facilities located in the two buffer areas around Chelsea River and in Chelsea, Revere, East Boston, Everett and Charlestown.

1. Surface Water Quality

Each facility operates one outfall that discharges into Chelsea River. One facility, Global REVCO, also discharges treated effluent into Sales Creek. Chelsea River is an urban tidal river flowing from the mouth of Mill Creek, between Chelsea and Revere, to Boston's Inner Harbor, between East Boston and Chelsea. For centuries Chelsea River has been flanked by working industries which have used the channel to transport raw materials and finished goods. Sales Creek is a small water body which flows into Belle Isle Inlet and into Winthrop Bay.

The Chelsea River is one of eleven Designated Port Areas (DPAs) established by the Massachusetts Office of Coastal Zone Management to promote and protect water-dependent industrial uses.[1] In general, the designation places some limitations on public access to and recreational use of a waterfront area.[2]

As discussed in the permit Fact Sheets, MassDEP's federally-approved water quality standards classify the segment of the Chelsea River in which the facilities are located as Class SB (CSO).[3] Class SB waters are described in the Commonwealth of Massachusetts Surface Water Quality Standards (WQSs) (314 CMR 4.05(4)(b)) as follows: *"These waters are designated as a habitat for fish, other aquatic life and wildlife, including for their reproduction, migration, growth and other critical functions, and for primary and secondary contact recreation. In certain waters, habitat for fish, other aquatic life and wildlife may include, but is not limited to, seagrass…These waters shall have consistently good aesthetic value."* Sales Creek is classified as SA (ORW). The Chelsea River and Sales Creek are part of the Boston Harbor Drainage Area.

EPA Region 1 has been issuing the Mystic River Watershed a water quality Report Card based on bacterial contamination since 2006. The report card is a collaborative effort between EPA and the Mystic River Watershed Association and informs the public about water quality issues as well as identifies watershed areas of concern. Historically, the report card grades have fluctuated between a D- and C-. The watershed received a D for water quality in 2012.[4]

2. Particular Facilities or Sites

EPA has identified facilities or sites located within the 0.5 mile study area bordering Chelsea River located in the cities of Chelsea, Revere, and East Boston that are required to report to, or that are otherwise listed or tracked by EPA and/or MassDEP. These sites are depicted in

---

[1] http://www.mass.gov/eea/docs/czm/port-harbor/dpa/chelsea-creek-dpa-map.pdf
[2] Chelsea Creek Community Based Comparative Risk Assessment, Spring 2003. EPA Grant CX82756101
[3] http://water.epa.gov/scitech/swguidance/standards/wqslibrary/upload/mawqs_figures_tables.pdf
[4] http://www.epa.gov/mysticriver/reportcards.html

Figure 1[5] from the EJ Analysis of March 2014 and in the table that follows and supporting Attachments B and C to the EJ Analysis of March 2014. In response to comments, EPA also identified sites located within a 1.0 mile buffer bordering Chelsea River and has depicted these facilities in Figure 1A of Appendix 1 and in the table that follows. In expanding the study area to one mile, areas in Everett and Charlestown were added to the buffer area and thus the number of regulated facilities in Everett and Charlestown were added for comparison purposes. The criteria that the agencies use in determining which sites or facilities to track varies depending on the particular type of site or facility involved. The fact that sites and facilities are tracked by the agencies does not necessarily reflect any conclusion regarding the extent to which particular sites or facilities present a health or environmental hazard to the surrounding community.

Number and Type of Regulated Facilities or Sites

Site Type	0.5 mile Buffer Area	1.0 mile Buffer Area	East Boston	Charles town	Chelsea	Everett	Revere
MassDEP Tier Classified Site	10	38	10	8	9	28	13
Combined Sewer Overflows (CSOs)	7	10	10	7	4	No Data	No Data
Toxic Release Inventory (TRI)	7	11	2	4	7	11	0
Air Facility System (AFS) Major	4	5	2	2	1	2	2
AFS Minor	34	82	29	22	37	51	23
NPDES Major	3	3	2	1	1	1	0
NPDES Non-Major	12	20	4	6	10	5	6
Resource Conservation and Recovery Act (RCRA) Large Quantity Generators (LQGs)	11	12	4	1	1	4	7

Sources: See Attachment C to the March 2014 EJ Analysis for Data Sources and Attachment B2 for the lists of the facilities referenced in the 1.0 mile buffer area around Chelsea River

IIIC. Health

EPA compiled health indicators obtained from the Massachusetts Department of Public Health (MA DPH) Community Health Information Profiles (CHIPS) and the MA DPH Environmental Public Health Tracking Network database. These databases contain health information for Boston, Revere, Chelsea, and Everett as well as for the state of Massachusetts and were chosen because the scale of health data resolution (e.g., town vs. county level) is finer than that afforded by other databases such as EJView. Unfortunately, health statistics were not of fine enough resolution to enable health characterizations specific to the study area. In presenting this health

[5] Not every facility or site may be visible in Figure 1 and Figure 1A due to the stacking of symbols. Some facilities or sites are regulated under multiple programs.

information, it should not be concluded that the incidence of health conditions in these towns is specifically or directly linked to the existence of any particular pollution source in or affecting the area, or of pollution in general.

Community Health Status Indicators and Asthma Data

Health Status Indicator	City of Boston	City of Revere	City of Chelsea	City of Everett	Mass State
Infant mortality rate for 2010[6]	3.7	2.7	4.6	1.6	4.4
Lead poisoning case rate for 2010[7]	0.6	0.0	1	0.0	0.3
Age-adjusted rate of cancer deaths[8]	181.3	197.2	192.5	212.8	170.3
Age-adjusted rate of lung cancer deaths	43.2	60.3	62.9	85.3	47.2
Age-adjusted rate of breast cancer deaths	21.5	21.8	11.2	12.5	19.1
Age-adjusted rate of cardiovascular disease death	187.4	191.6	258.2	193.2	192.0
Total age-adjusted rate of asthma inpatient hospitalization[81, 9]	330.0	167.9	NA	NA	155.5
Black Non-Hispanic rate	591.5	657.4	NA	NA	392.3
Hispanic rate	453.7	329.2	NA	NA	341.8
Age 0 to 4 years rate	937.5	422.4	NA	NA	429.7
Age 65 and older rate	410.3	175.5	NA	NA	259.8
Age-adjusted rate for emergency room visits for asthma[81, 10]	985.9	570.0	NA	NA	580.5
Pediatric asthma prevalence in the 2007-2008 School Year[11]	13.9	9.9	9.6	9.6	10.8

Notes:
NA = not available.

Sources: http://www.mass.gov/dph/masschip and https://matracking.ehs.state.ma.us/Health_Data/Pediatric_Asthma.html#
Database accessed Jan 2014 and July 2014.

[6] Infant mortality rate is expressed per 1,000 live births in the same data year. Data for 2010.
[7] Lead poisoning rates is expressed per 1,000 children screened. Data for 2010.
[8] Age-adjusted and age-specific rates are usually expressed per 100,000 persons. Data for 2010 unless indicated otherwise.
[9] Asthma rates are 3-yr aggregates for 2007-2009.
[10] Data are for calendar year 2008.
[11] Asthma prevalence is only for children enrolled in Kindergarten through 8th grade.

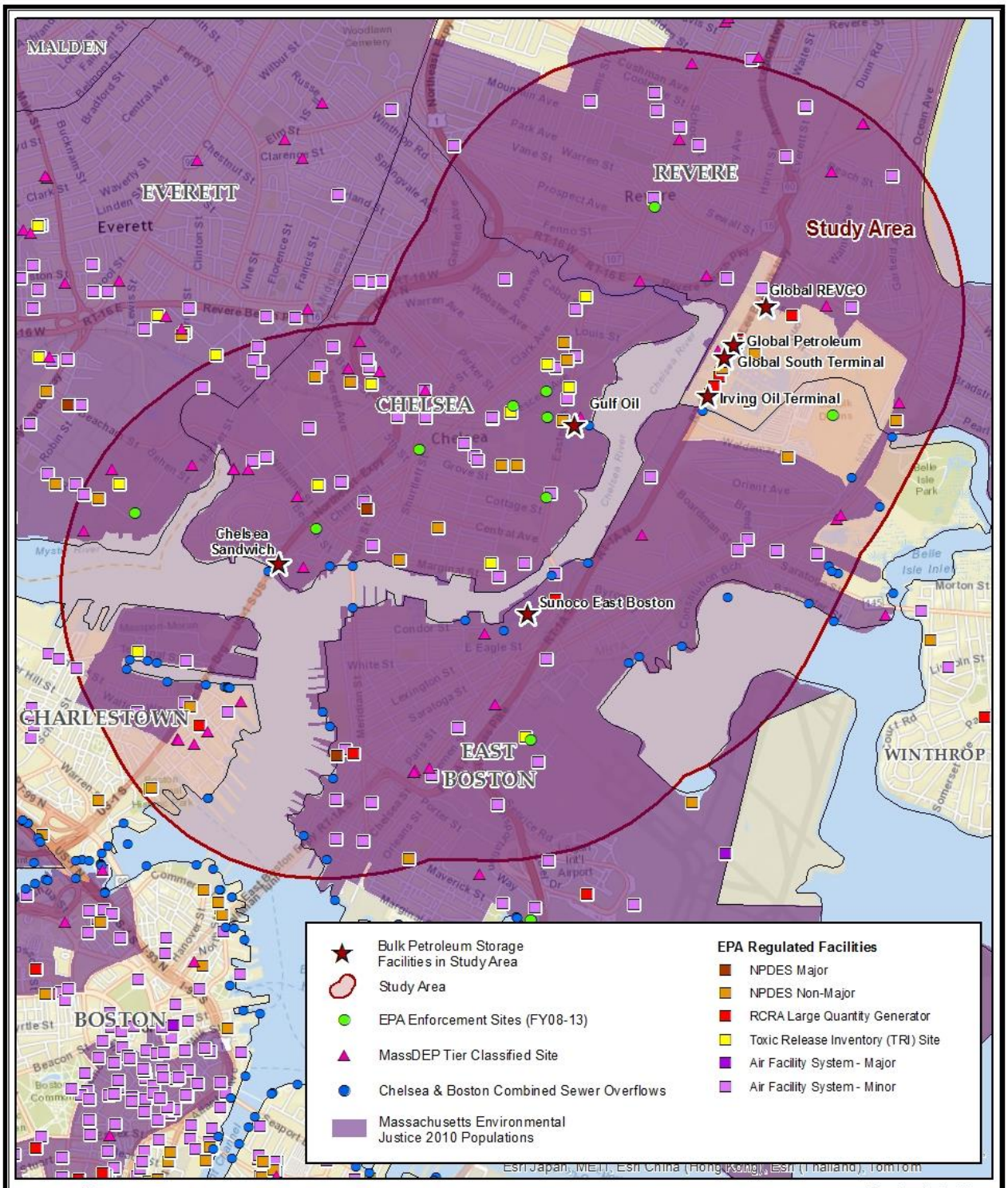

Regulated Facilities and Sites
Chelsea River 1.0 Mile Buffer Area
Chelsea, East Boston, Revere,
Everett and Charlestown, Massachusetts

EPA

FIGURE 1A

Map created by EPA Region 1 GIS Center Map Tracker ID 9921 July 29, 2014 Data Sources: See Attachment B

APPENDIX 1: Attachment A2

Social Demographics for a 1.0-mile Buffer Around Chelsea River

EJView ACS Summary Report

Location: -71.007900,42.401150,-71.014767,42.403052,-71.015453,42.402545,-71.009960,42.401150,-71.012192,42.39962

Study Area: 1.0 mile around the polygonal location

Summary of ACS Estimates	2006 - 2010
Population	101,728
Population Density (per sq. mile)	12,044
Minority Population	61,602
% Minority	61%
Households	36,599
Housing Units	39,678
Housing Units Built Before 1950	25,794
Per Capita Income	24,546
Land Area (sq. miles) (Source: SF1)	8.45
% Land Area	82%
Water Area (sq. miles) (Source: SF1)	1.85
% Water Area	18%

	2006 - 2010 ACS Estimates	Percent	MOE (±)
Population by Race			
Total	101,728	100%	1,183
Population Reporting One Race	83,690	82%	2,296
White	61,259	60%	639
Black	6,946	7%	452
American Indian	254	0%	150
Asian	5,358	5%	450
Pacific Islander	47	0%	127
Some Other Race	9,825	10%	478
Population Reporting Two or More Races	18,038	18%	1,045
Total Hispanic Population	47,877	47%	1,140
Total Non-Hispanic Population	53,851		
White Alone	40,125	39%	423
Black Alone	5,611	6%	454
American Indian Alone	86	0%	127
Non-Hispanic Asian Alone	5,342	5%	450
Pacific Islander Alone	47	0%	127
Other Race Alone	616	1%	261
Two or More Races Alone	2,023	2%	328
Population by Sex			
Male	51,727	51%	623
Female	50,001	49%	596
Population by Age			
Age 0-4	8,868	9%	224
Age 0-17	24,549	24%	315
Age 18+	77,179	76%	474
Age 65+	10,506	10%	195

Data Note: Detail may not sum to totals dues to rounding. Hispanic population can be of any race. N/A means not available.
Source: U.S. Census Bureau, American Community Survey (ACS) 2006 - 2010.

EJView ACS Summary Report

Location: -71.007900,42.401150,-71.014767,42.403052,-71.015453,42.402545,-71.009960,42.401150,-71.012192,42.39962

Study Area: 1.0 mile around the polygonal location

	2006 - 2010 ACS Estimates	Percent	MOE (±)
Population 25+ by Educational Attainment			
Total	67,020	100%	607
Less than 9th Grade	13,734	20%	268
9th - 12th Grade, No Diploma	7,860	12%	206
High School Graduate	23,354	35%	279
Some College, No Degree	10,655	16%	222
Associate Degree	2,569	4%	155
Bachelor's Degree or more	11,416	17%	242
POPULATION AGE 5+ YEARS BY ABILITY TO SPEAK ENGLISH			
Total	92,859	100%	997
Speak only English	36,491	39%	398
Non-English at Home[1+2+3+4]	56,368	61%	911
[1]Speak English "very well"	19,367	21%	356
[2]Speak English "well"	13,089	14%	274
[3]Speak English "not well"	13,163	14%	300
[4]Speak English "not at all"	10,749	12%	618
[3+4]Speak English "less than well"	23,912	26%	650
[2+3+4]Speak English "less than very well"	37,001	40%	688
POPULATION AGE 5+ YEARS BY LANGUAGE SPOKEN AT HOME			
Total	N/A	N/A	N/A
Speak only English	N/A	N/A	N/A
Non-English Speaking	N/A	N/A	N/A
Population by Place of Birth for the Foreign-Born			
Total	N/A	N/A	N/A
Europe	N/A	N/A	N/A
Asia	N/A	N/A	N/A
Africa	N/A	N/A	N/A
Oceania	N/A	N/A	N/A
Americas	N/A	N/A	N/A
Households by Household Income in 1999			
Household Income Base	36,599	100%	176
< $15,000	6,848	19%	180
$15,000 - $25,000	4,318	12%	156
$25,000 - $50,000	9,106	25%	186
$50,000 - $75,000	6,909	19%	142
$75,000 +	9,418	26%	208
Occupied Housing Units by Tenure			
Total	36,599	100%	176
Owner Occupied	12,407	34%	129
Renter Occupied	24,192	66%	181

Data Note: Detail may not sum to totals dues to rounding. Hispanic population can be of any race. N/A means not avialable.
2006-2010 ACS 5-year Estimates: The American Community Survey (ACS) summary files provide nation-wide population and housing characteristic data at all Census summary levels down to the Block Group level. This data was collected between January 1, 2006 and December 31, 2010. ACS replaces the decennial census sample data, and is not the 2010 Census population counts data. (http://www.census.gov/acs/www/#fragment-3)
Margin of error (MOE): The MOE provides a measure of the uncertainty in the estimate due to sampling error in the ACS survey. Applying the MOE value yields the confidence interval for the estimate. For example, an estimate value of 50 and +/- MOE of 5 means the true value is between 45 and 55 with a 90 percenet certainty (http://www.census.gov/acs/www/Downloads/data_documentation/Accuracy/MultiyearACSAccuracyofData2010.pdf). Maximum MOE is shown for each value within study area.
Source: U.S. Census Bureau, American Community Survey (ACS) 2006 - 2010.

APPENDIX 1: Attachment B2

Facilities and Sites Located in a 1.0 Mile Buffer Area Around Chelsea River

1.0 Mile Buffer Area Around Chelsea River		
Enforcement Sites (FY 08-13)		
NAME	**ADDRESS**	**CITY**
Paul Revere Transportation	100 Eastern Avenue	Chelsea
City of Chelsea	500 Broadway	Chelsea
NStar	61 Beacon Street	Chelsea
NStar	194 Crescent Avenue	Chelsea
NStar	Willoughby Street	Chelsea
JSB Industries	130 Crescent Avenue	Chelsea
City of Revere	281 Broadway Street	Revere
Suffolk Downs	Tomesello Way	Boston/Revere
Swissport/Biofuel	196 Prescott Street	E. Boston
Aggregate Industries	201B Rover Street	Everett
Constellation Mystic Generating Station	173 Alford	Charlestown

1.0 Mile Buffer Area Around Chelsea River			
Mass DEP Tier Classified Chapter 21E Sites			
NAME	**ADDRESS**	**TOWN**	**TYPE**
BEHIND #1181 BENNINGTON ST	PALERMO ST	BOSTON	TIER1D
CHARLESTOWN NAVY YARD-BLDG 105	FIRST AVE AND NINTH ST	BOSTON	TIERII
CITY OF BOSTON DPW YARD	0 CONDOR ST	BOSTON	TIERII
CRTYRD BTWN POWERPLANT & ROPEWALK BLDGS	CHARLESTOWN NAVY YARD	BOSTON	TIER1D
NAVAL SHIPYARD PRCLS 567	CHELSEA ST	BOSTON	TIER1D
NAVY YARD-POWERPLANT	NINTH ST	BOSTON	TIER1D
NEW EAST BOSTON BRANCH LIBRARY	365 PRESCOTT ST	BOSTON	TIERII
NO LOCATION AID	225 AND 345-365 MCCLELLAN HWY	BOSTON	TIERII
NO LOCATION AID	1181 BENNINGTON ST	BOSTON	TIERII
NO LOCATION AID	162 R CHELSEA ST	BOSTON	TIERII
NO LOCATION AID	183 CHELSEA STREET	BOSTON	TIERII
POWER PLANT TANKS #4 & #5 AREA	FMR CHARLESTOWN NAVY YARD	BOSTON	TIER1D
SALESIAN SCHOOL	189 PARIS ST	BOSTON	TIERII

CHELSEA SANDWICH TERMINAL	11 BROADWAY	CHELSEA	TIERII
EDEN ST	22 ADDISON ST	CHELSEA	TIER1D
FORMER GASOLINE STATION	156 WILLIAMS ST	CHELSEA	TIERII
GULF OIL TERMINAL	281 EASTERN AVE	CHELSEA	TIERII
INTERSECTION WITH CARTER ST	145 THRU 155 BEECH ST	CHELSEA	TIERII
MULTI-UNIT RESIDENTIAL BUILDING	116 MARLBOROUGH ST	CHELSEA	TIER1D
NO LOCATION AID	103 HEARD ST	CHELSEA	TIERII
NO LOCATION AID	265 CARTER ST	CHELSEA	TIERII
PARKING LOT	1000 JUSTIN DR	CHELSEA	TIERII
BOMACK LNG FACILITY	18 ROVER ST	EVERETT	TIERII
BOSTON GAS PLANT FMR	ROVER ST	EVERETT	TIERII
Mass DEP Tier Classified Chapter 21E Sites (cont.)			
NAME	**ADDRESS**	**TOWN**	**TYPE**
COAL GAS FACILITY FMR	MARKET ST BEHEN ST	EVERETT	TIER1A
NO LOCATION AID	69 ROVER ST	EVERETT	TIERII
NO LOCATION AID	18 ROVER ST	EVERETT	TIERII
NO LOCATION AID	18 ROVER ST	EVERETT	TIERII
NO LOCATION AID	18 ROVER ST	EVERETT	TIERII
NO LOCATION AID	69 ROVER ST	EVERETT	TIERII
ABRAHAM ELEMENTARY SCHOOL	68 TUCKERMAN ST	REVERE	TIERII
NO LOCATION AID	85 BENNINGTON ST	REVERE	TIER1D
NO LOCATION AID	140 LEE BURBANK HWY	REVERE	TIER1D
NO LOCATION AID	485 BROADWAY	REVERE	TIERII
NO LOCATION AID	400 REVERE BEACH PKWY	REVERE	TIERII
PROSPECT HOUSE	420 RESERVOIR AVENUE	REVERE	TIERII
SITE DEVELOPMENT	60 UPHAM ST	REVERE	TIERII

1.0 Mile Buffer Area Around Chelsea River			
EPA Regulated Facilities – National Pollutant Discharge Elimination System (NPDES)			
Name	**Address**	**City**	**Type**
BOSTON WATER AND SEWER COMMISSION CSO	CITYWIDE	BOSTON (EAST BOSTON)	NPDES MAJOR
MWRA STORAGE CONDUIT	1 MEDFORD ST (LITTLE MYSTIC RIVER)	BOSTON	NPDES NON-MAJOR
MGH INSTITUTE OF HEALTH PROFESSIONS	36 FIRST AVENUE	BOSTON (CHARLESTOWN)	NPDES NON-MAJOR
MAVERICK GARDENS/CARLTON'S WHA	MAVERICK STREET	BOSTON (EAST BOSTON)	NPDES NON-MAJOR

CENTRAL ENGRAVING CO INC	158 CARTER ST	CHELSEA	NPDES NON-MAJOR
CHELSEA COMBINED SEWER OVERFLOWS	CITYWIDE	CHELSEA	NPDES MAJOR
CHELSEA SANDWICH PETROLEUM STORAGE FACILITY	11 BROADWAY	CHELSEA	NPDES NON-MAJOR
DEMOLITION AND CONSTRUCTION - CATAMOUNT MANAGEMENT	204 MAPLE STREET	CHELSEA	NPDES NON-MAJOR
GULF OIL TERMINAL	281 EASTERN AVE.	CHELSEA	NPDES NON-MAJOR
MA WATER RESOURCES AUTHORITY	2 GRIFFIN WAY	CHELSEA	NPDES NON-MAJOR
MWRA - PHASE 5 VALVE RP-#6346	LYNN, REVERE, CHELSEA	CHELSEA	NPDES NON-MAJOR
ROCK CHAPEL MARINE LLC	99 MARGINAL STREET	CHELSEA	NPDES NON-MAJOR
SPENCER ROW HOUSING	205 SPENCER AVENUE	CHELSEA	NPDES NON-MAJOR
WATER, SEWER AND DRAIN IMPROVEMENTS	LIBRARY ST	CHELSEA	NPDES NON-MAJOR
WEBSTER BLOCK RESIDENTIAL & COMMERICIAL	1 WEBSTER AVE	CHELSEA	NPDES NON-MAJOR
SUNOCO LOGISTICS EAST BOSTON TERMINAL	467 CHELSEA ST	EAST BOSTON	NPDES MAJOR
AGGREGATE INDUSTRIES-NORTHEAST REGION INC	201B ROVER ST.	EVERETT	NPDES NON-MAJOR
BEACHMONT VFW	150 BENNINGTON STREET	REVERE	NPDES NON-MAJOR
EPA Regulated Facilities – National Pollutant Discharge Elimination System (NPDES) (cont.)			
Name	**Address**	**City**	**Type**
FEDEX	201 LEE BURBANK HIGHWAY	REVERE	NPDES NON-MAJOR
GLOBAL PETROLEUM TERMINAL	140 LEE BURBANK HIGHWAY	REVERE	NPDES NON-MAJOR
GLOBAL REVCO TERMINAL	101/201 LEE BURBANK HIGHWAY	REVERE	NPDES NON-MAJOR
GLOBAL SOUTH TERMINAL	49/96 LEE BURBANK HIGHWAY	REVERE	NPDES NON-MAJOR
IRVING OIL TERMINAL	41 LEE BURBANK HIGHWAY	REVERE	NPDES NON-MAJOR

1.0 Mile Buffer Area Around Chelsea River		
RCRA Large Quantity Generator		
Name	**Address**	**City**

FORMER MOBIL EAST BOSTON LUBE PLANT	580 CHELSEA ST	BOSTON
MASSACHUSETTS GENERAL HOSPITAL EAST	149 THIRTEENTH ST	BOSTON (CHARLESTOWN)
CVS PHARMACY 1265	210 BORDER ST	BOSTON-EAST BOSTON
GULF OIL TERMINAL	281 EASTERN AVE.	CHELSEA
SUNOCO LOGISTICS EAST BOSTON TERMINAL	467 CHELSEA ST	EAST BOSTON
GLOBAL PETROLEUM TERMINAL	71 LEE BURBANK HWY	REVERE
GLOBAL PETROLEUM TERMINAL	140 LEE BURBANK HIGHWAY	REVERE
GLOBAL REVCO TERMINAL LLC	186 LEE BURBANK HWY	REVERE
GLOBAL REVCO TERMINAL LLC	101 LEE BURBANK HWY	REVERE
GLOBAL SOUTH TERMINAL LLC	49 LEE BURBANK HWY	REVERE
IRVING OIL TERMINAL	41 LEE BURBANK HIGHWAY	REVERE
TARGET T1942	36 FURLONG DR	REVERE

1.0 Mile Buffer Area Around Chelsea River

Toxics Release Inventory (TRI)

Name	Address	City
UNITED STATES GYPSUM CO	200 TERMINAL STREET	BOSTON
AMERICAN FINISH & CHEMICAL CORP	1012 BROADWAY	CHELSEA
BILTRITE CORP	31 HIGHLAND AVENUE	CHELSEA
EMTEX INCORPORATED	181 SPENCER AVENUE	CHELSEA
GLYPTAL INC	305 EASTERN AVENUE	CHELSEA
MARSON CORP MARVEL CORP	130 CRESCENT AVENUE	CHELSEA
MODINE NORTHEAST INC	25 ARLINGTON STREET	CHELSEA
WATER CHEMICALS INC	155 6TH ST.	CHELSEA
US AIRWAYS	180 PRESCOTT ST	EAST BOSTON
ALLIED INDUSTRIES INC	201 ROVER STREET	EVERETT
MERRILL COMMUNICATIONS LLC	40 COMMERCIAL STREET	EVERETT

1.0 Mile Buffer Area Around Chelsea River

Air Facility System

Name	Address	City	Type
AIRPORT CITGO STATION	LOGAN INT'L AIRPORT	BOSTON	AIR MINOR
AMERICAN ARCHITECTURAL IRON	80 LIVERPOOL ST B459	BOSTON	AIR MINOR
AVIS RENT A CAR	LOGAN INT'L AIRPORT	BOSTON	AIR MINOR

CATERAIR INTERNATIONAL	5 WOOD ISLAND PARK	BOSTON	AIR MINOR
CONTINENTAL CLEANERS	15A BREED ST	BOSTON	AIR MINOR
EAST BOSTON HLTH CTR	10 GOVE STREET	BOSTON	AIR MINOR
FRANKIES CLEANERS	69 MAVERICK SQ	BOSTON	AIR MINOR
GEORGE H JAQUES	50 TERMINAL STREET	BOSTON	AIR MINOR
HW POWERS CO	14 MEDFORD ST.	BOSTON	AIR MINOR
MASS GENERAL HOSPITA	300 CHELSEA STREET	BOSTON	AIR MINOR
MASSACHUSETTS BIOMEDICAL RESEARCH CORP	114 16TH ST NAVAL YARD	BOSTON	AIR MINOR
MAVERICK LANDING PHASE I	41 MAVERICK STREET	BOSTON	AIR MINOR
MBTA ORIENT HEIGHTS CARHOUSE	1069 BENNINGTON ST	BOSTON	AIR MINOR
MWRA CENTRAL MAINTENANCE FACILITY	20 ADDISON ST	BOSTON	AIR MINOR
NEW ENGLAND CASKET COMPANY	1141 BENNINGTON ST	BOSTON	AIR SYNTHETIC MINOR
ORIENT HEIGHTS HOUSING	220 WALDEMAR AVE.	BOSTON	AIR MINOR
CHARLESTOWN HOUSING	55 BUNKER HILL ST.	BOSTON (CHARLESTOWN)	AIR MINOR
FIRST STUDENT	50 TERMINAL STREET	BOSTON (CHARLESTOWN)	AIR MINOR
LAFARGE BUILDING MATERIALS INC	285 MEDFORD STREET	BOSTON (CHARLESTOWN)	AIR MINOR
MASSACHUSETTS GENERAL HOSPITAL EAST	149 THIRTEENTH ST	BOSTON (CHARLESTOWN)	AIR SYNTHETIC MINOR
AMERICAN AIRLINES	LOGAN INTERNATIONAL AIRPORT	BOSTON (EAST BOSTON)	AIR MINOR
BUDGET RENT A CAR SYSTEMS INC	20 TOMAHAWK DRIVE	BOSTON (EAST BOSTON)	AIR MINOR
MASTER CLEANSERS	999 SARATOGA ST	BOSTON (EAST BOSTON)	AIR MINOR
AIR SERV CORPORATION	257 MARGINAL STREET	CHELSEA	AIR MINOR
AMERICAN FINISH & CHEMICAL COMPANY	960 BROADWAY	CHELSEA	AIR MINOR
AMOCO OIL COMPANY	111 EASTERN AVENUE	CHELSEA	AIR MINOR
CALENDER LINEN	644 WASHINGTON AVE.	CHELSEA	AIR MINOR
CHELSEA CLOCK LLC	284 EVERETT AVE.	CHELSEA	AIR MINOR
CHELSEA HIGH SCHOOL	299 EVERETT AVENUE	CHELSEA	AIR MINOR
CHELSEA SANDWICH PETROLEUM STORAGE FACILITY	11 BROADWAY	CHELSEA	AIR MINOR
CHELSEA SOLDIERS HOME	91 CREST AVENUE	CHELSEA	AIR SYNTHETIC MINOR
CRESCENT AVENUE REALTY TRUST	224 CRESCENT AVENUE	CHELSEA	AIR MINOR
DENNIS K BURKE INC	284 EASTERN AVENUE	CHELSEA	AIR MINOR
E CIARDI CO INC	96 LIBRARY STREET	CHELSEA	AIR MINOR
EASTERN SALT COMPANY INC	37 MARGINAL ST	CHELSEA	AIR MINOR

Air Facility System (cont.)			
Name	**Address**	**City**	**Type**
EMTEX INCORPORATED	181 SPENCER AVENUE	CHELSEA	AIR SYNTHETIC MINOR
GENERAL ELECTRIC COMPANY	96 LIBRARY STREET	CHELSEA	AIR MINOR
GLYPTAL INC	305 EASTERN AVENUE	CHELSEA	AIR MINOR
GULF OIL TERMINAL	281 EASTERN AVE.	CHELSEA	AIR MAJOR
JSB INDUSTRIES	130 CRESENT AVENUE	CHELSEA	AIR MINOR
KAYEM FOODS	75 ARLINGTON ST	CHELSEA	AIR MINOR
MACK SIGN INC	250 MAPLE STREET	CHELSEA	AIR MINOR
MANCHESTER GR REALTY	248 BROADWAY	CHELSEA	AIR MINOR
MARSON CORP MARVEL CORP	130 CRESCENT AVENUE	CHELSEA	AIR MINOR
MODINE NORTHEAST INC	25 ARLINGTON STREET	CHELSEA	AIR MINOR
MWRA CHELSEA CREEK	340 MARGINAL ST	CHELSEA	AIR SYNTHETIC MINOR
NEW ENGLAND TRAWLER EQUIPMENT	291 EASTERN AVE.	CHELSEA	AIR MINOR
NOVELTY BIAS BIND CO	11 WEBSTER AVENUE	CHELSEA	AIR MINOR
PILLSBURY COMPANY	270 2ND STREET	CHELSEA	AIR MINOR
RAPID FLOW	85 CRESCENT AVE	CHELSEA	AIR MINOR
ROCK CHAPEL MARINE LLC	99 MARGINAL STREET	CHELSEA	AIR MINOR
SIGNATURE BREADS INC.	365 BEACHAM ST	CHELSEA	AIR SYNTHETIC MINOR
STANDARD BOX CO INC	28-38 GERRISH AVENUE	CHELSEA	AIR MINOR
SUMMIT PRESS INC	240 ARLINGTON ST.	CHELSEA	AIR MINOR
SYNTHON INDUSTRIES I	300 3RD STREET	CHELSEA	AIR MINOR
THOMAS STRAHAN INC	150 HEARD STREET	CHELSEA	AIR MINOR
TILL BUILDING	241-265 BROADWAY	CHELSEA	AIR MINOR
TRAVACO LABS INC	345 EASTERN AVENUE	CHELSEA	AIR MINOR
DELTA AIRLINES	LOGAN AIRPORT	EAST BOSTON	AIR MINOR
MATTERA MICHAEL SR	214 BREMEN ST	EAST BOSTON	AIR MINOR
SUNOCO LOGISTICS EAST BOSTON TERMINAL	467 CHELSEA ST	EAST BOSTON	AIR MAJOR
US AIRWAYS	180 PRESCOTT ST	EAST BOSTON	AIR MINOR
AGGREGATE INDUSTRIES-NORTHEAST REGION INC	201B ROVER ST.	EVERETT	AIR SYNTHETIC MINOR
ALLIED INDUSTRIES INC	201 ROVER STREET	EVERETT	AIR MINOR
CARMOTE PAINTS INC	376 THIRD ST	EVERETT	AIR MINOR
EMCO PRINTERS INC	99 EAST ELM ST.	EVERETT	AIR MINOR
EVERETT DPW	48 EAST ELM STREET	EVERETT	AIR MINOR
GENERAL STEEL PRODUCT	383 SECOND ST	EVERETT	AIR MINOR
ISLAND END COGEN	156 ROVER STREET	EVERETT	AIR MINOR

MERRILL COMMUNICATIONS LLC	40 COMMERCIAL STREET	EVERETT	AIR MAJOR
ABRAHAM LINCOLN SCHOOL	68 TUCKERMAN STREET	REVERE	AIR MINOR
ATLANTIC CARE NURSING HOME	204 PROCTOR AVENUE	REVERE	AIR MINOR
BEST PETROLEUM CO INC	1781 NORTH SHORE RD	REVERE	AIR MINOR
BOSTON GAS CO	RAILROAD AVE	REVERE	AIR MINOR
CAPITOL WASTE SERVICES,	20 RAILROAD STREET	REVERE	AIR MINOR

Air Facility System (cont.)

Name	**Address**	**City**	**Type**
DURANT PERFORMANCE COATINGS INC	112 RAILROAD ST	REVERE	AIR MINOR
GLOBAL PETROLEUM TERMINAL	140 LEE BURBANK HIGHWAY	REVERE	AIR MAJOR
GLOBAL REVCO TERMINAL	101/201 LEE BURBANK HIGHWAY	REVERE	AIR MINOR
GLOBAL SOUTH TERMINAL	49/96 LEE BURBANK HIGHWAY	REVERE	AIR MINOR
IRVING OIL TERMINAL	41 LEE BURBANK HIGHWAY	REVERE	AIR MAJOR
JAY CLEANERS	505 BROADWAY	REVERE	AIR MINOR
NECCO CO-GENERATION PLANT	135 AMERICAN LEGION HIGHWAY	REVERE	AIR SYNTHETIC MINOR
NEW ENGLAND CONFECTIONERY COMPANY	135 AMERICAN LEGION HIGHWAY	REVERE	AIR SYNTHETIC MINOR
PARKWAY WONDLD 1459	1459 N. SHORE RD.	REVERE	AIR MINOR
REVERE HIGH SCHOOL	101 SCHOOL ST	REVERE	AIR MINOR
REVERE SCHOOL DEPT	10 PLEASANT STREET	REVERE	AIR MINOR
WHITMOR COMPANY INC	1 WHITMORE ROAD	REVERE	AIR MINOR

APPENDIX 2

Standard Incidence Ratios of Selected Cancers in Select Massachusetts Towns

Table 1: 2003-2007

(95% confidence limits in parentheses)

Tumor type	Chelsea	Boston	Everett	Revere	E. Boston*
Leukemia-males	108.2 (55.8-188.9)	93.9 (79.8-109.7)	93.8 (49.9-160.5)	86.8 (49.6-140.9)	187.4 (71.2 -303.5)
Leukemia - females	61.2 (19.7-142.8)	95.2 (79.7-112.7)	71.2 (30.7-140.3)	129.8 (78.1-202.6)	186.1 (88.6 -283.7)
Larynx-males	112.9 (36.4-263.5)	115.7 (91.8-143.8)	99.1 (36.2-215.6)	160.0 (85.1-273.6)	202.4 (40.4 -364.4)
Larynx-females	423.9 (136.6-989.3)	108.6 (69.6-161.6)	273.3 (88.1-637.8)	Not computed	Not computed
Esophagus-males	107.2 (46.2-211.3)	99.7 (82.4-119.4)	118.0 (60.9-206.1)	73.0 (35.0-134.3)	157.4 (31.5 -283.4)
Esophagus-females	Not computed	123.6 (89.8-165.9)	Not computed	Not computed	Not Computed
Stomach-males/females	Not computed	Not computed	Not computed	Not computed	Not computed

Notes:

1. A SIR was not computed when the number of observed cases was <5. Consequently, no data was computed for either male or female stomach cancer incidence and for the neighborhood of Charlestown for any of the noted cancer types for this reporting period.
2. Shading indicates statistically significant elevated rates.

Sources: http://www.mass.gov/eohhs/researcher/community-health/masschip/cancer-citytown-profile-2003-2007.html. *Data for the neighborhood of E. Boston was obtained from Cancer Incidence and Mortality in Boston Neighborhoods 2003-2007: http://www.mass.gov/eohhs/docs/dph/cancer/boston-cancer-report.pdf

Table 2: 2005-2009

(95% confidence limits in parentheses)

Tumor Type	Chelsea	Boston	Everett	Revere
Leukemia- males	123.5 (67.4-207.2)	80.0 (67.8-93.7)	83.1 (41.4-148.6)	96.1 (59.4-146.8)
Leukemia -females	Not Computed	80.4 (66.9-95.9)	128.8 (68.5-220.3)	93.7 (52.4-154.5)
Larynx-males	Not computed	104.9 (82.9-130.9)	101.9 (32.8-237.8)	172.7 (96.6-284.8)
Larynx-females	Not computed	114.1 (75.1-165.9)	318.6 (102.7-743.5)	Not computed
Esophagus-males	68.6 (22.1-160.1)	77.5 (62.9-94.3)	95.2 (41.0-187.6)	73.1 (36.4-130.7)
Esophagus-females	Not computed	115.9 (84.9-154.7)	Not computed	Not computed
Stomach- males	182 (94.0-318.2)	104.7 (86.8-125.3)	177.2 (96.8-297.4)	108.2 (60.5-178.5)
Stomach- females	229.5 (114.4 -410.7)	133.5 (108.6-162.4)	253.3 (134.7-433.1)	72.8 (26.6-158.4)

Notes:

1. A SIR was not computed when the number of observed cases was <5.
2. Data were not available for the neighborhoods of E. Boston or Charlestown for this reporting period.
3. Shading indicates statistically significant elevated rates

Source: http://www.mass.gov/eohhs/gov/departments/dph/programs/health-stats/cancer-registry/data/city-town/cancer-incidence-in-mass-2005-2009.html

.

APPENDIX 3

Selected Health Disparities for the Greater Boston Region[a]

Table 1: 2005 Population in Cities Comprising the Boston Region[a]

	City of Boston	Brookline	Chelsea	Revere	Winthrop
Population	558,435	56,422	34,128	45,551	17,067

Notes:
[a]Boston Region includes Boston, Chelsea, Revere, Winthrop and Brookline.
Source: Racial and Ethnic Health Disparities by EOHHS Regions in Massachusetts: Greater Boston Region (pgs 282-330). MA DPH, Nov. 2007.
http://www.mass.gov/eohhs/docs/dph/research-epi/disparity-report.pdf

Table 2: Race and Ethnic Breakdown of Population in Cities in Boston Region and Massachusetts (2005)

Values in Percent

Racial Hispanic Group	City of Boston	Brookline	Chelsea	Revere	Winthrop	Boston Region[a]	MA Total
White*	49.8	73	35.9	81.6	93.9	54.1	81
Black*	25	4.2	5.6	2.5	1.5	20.4	6
Hispanic	16.4	4.8	53.3	10.5	3.1	16.6	7.9
Asian*	8.4	17.9	5	5.2	1.3	8.6	4.9
American Indian*	0.3	0.1	0.3	0.2	0.2	0.3	0.2

Notes:
*Non-Hispanics
[a]Boston Region includes Boston, Chelsea, Revere, Winthrop and Brookline.
Source: Racial and Ethnic Health Disparities by EOHHS Regions in Massachusetts: Greater Boston Region (pgs 282-330). MA DPH, Nov. 2007.
http://www.mass.gov/eohhs/docs/dph/research-epi/disparity-report.pdf

Table 3: Population by Age Group
in Cities in Boston Region and Massachusetts (2005)
Values in Percent

Racial Hispanic Group	City of Boston	Brookline	Chelsea	Revere	Winthrop	Boston Region[a]	MA Total
0-19 yrs	24	19	30	23	21	23	26
20-24 yrs	11	10	7	5	5	10	7
25-44 yrs	35	34	35	33	34	35	29
45-64 yrs	20	25	18	23	25	20	25
65+ yrs	11	12	11	16	16	11	13

Notes:
[a]Boston Region includes Boston, Chelsea, Revere, Winthrop and Brookline.
Source: Racial and Ethnic Health Disparities by EOHHS Regions in Massachusetts: Greater Boston Region (pgs 282-330). MA DPH, Nov. 2007.
http://www.mass.gov/eohhs/docs/dph/research-epi/disparity-report.pdf

Table 4: Select Health Disparities for the Greater Boston Region by Race and Ethnicity

Endpoint	Boston Region[a]	Massachusetts
Premature Mortality Rate[b] by Race and Ethnicity 2003-2005 (deaths/100,000)		
White Non-Hispanic	383	321
Black Non-Hispanic	516	487
Hispanic	257	298
Asian Non-Hispanic	180	154
Adults who Reported Fair or Poor Health by Race and Ethnicity 2005		
White Non-Hispanic	13.4%	12.3%
Black Non-Hispanic	16.9%	16.5%

Hispanic	0.6%	23.5%
Infant Mortality Rates 2003-2005 (deaths/100,000 live births)		
White Non-Hispanic	3.2	4.1
Black Non-Hispanic	11.6	11.2
Hispanic	6.2	7.0
Asian Non-Hispanic	2.1	3.0
Female Breast Cancer Mortality Rates 2001-2005 (deaths/100,000)		
White Non-Hispanic	28	25
Black Non-Hispanic	32	29
Hispanic	12	13
Asian Non-Hispanic	9	7
Lung Cancer Mortality Rates 2001-2005 (deaths/100,000)		
White Non-Hispanic	63	55
Black Non-Hispanic	54	54
Hispanic	14	20
Asian Non-Hispanic	34	29
Asthma Emergency Department Visit Rates, Children Ages 0-14, 2005 (visits/100,000)		
White Non-Hispanic	592	516
Black Non-Hispanic	3111	2096
Hispanic	1799	1573
Asian Non-Hispanic	623	356
Diabetes Hospital Discharge Rate 2003-2005 (hospitalizations/100,000)		
White Non-Hispanic	136	114
Black Non-Hispanic	416	368
Hispanic	239	242
Asian Non-Hispanic	54	45
Diabetes Death Rate 2003-2005 (deaths/100,000)		
White Non-Hispanic	20	17
Black Non-Hispanic	37	38

Hispanic	15	29
Asian Non-Hispanic	12	14
Hospital Discharge Rate for Hypertension 2003-2005 (hospitalizations/100,000)		
White Non-Hispanic	38	28
Black Non-Hispanic	207	176
Hispanic	114	89
Asian Non-Hispanic	45	33
Heart Disease Death Rate by Race/Ethnicity 2003-2005 (deaths/100,000)		
White Non-Hispanic	188	185
Black Non-Hispanic	196	209
Hispanic	85	104
Asian Non-Hispanic	68	68

Notes:
[a]Greater Boston Region includes Boston, Chelsea, Revere, Winthrop and Brookline.
[b]Premature mortality represents deaths before age 75.

Sources for Appendix 3: Racial and Ethnic Health Disparities by EOHHS Regions in Massachusetts: Greater Boston Region (pgs 282-330). MA DPH, Nov. 2007. http://www.mass.gov/eohhs/docs/dph/research-epi/disparity-report.pdf.